MOEN

Buy it for looks. Buy it for life.®

Illustrated Parts

■ **Order by Part Number**

There is more than 1 version of this model. Page down to identify the version you have.

WEYMOUTH™
Single-Handle Kitchen Faucet with matching Side Spray

MODELS	FINISH
S72101	Chrome
S72101SRS	Spot Resist Stainless
S72101ORB	Oil Rubbed Bronze
S72101NL	Polished Nickel

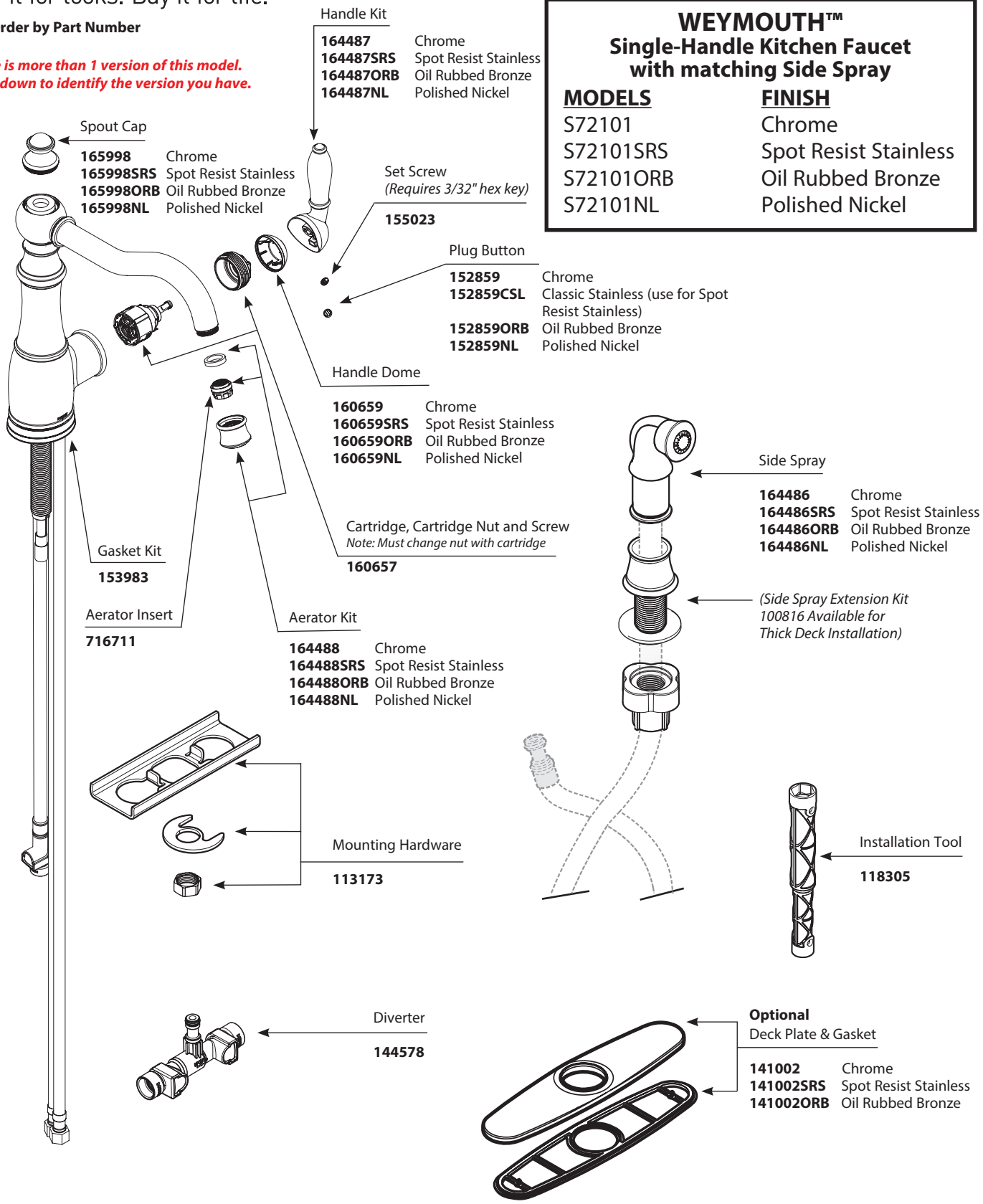

MOEN

Buy it for looks. Buy it for life.®

Illustrated Parts

■ **Order by Part Number**

WEYMOUTH™
Single-Handle Kitchen Faucet with matching Side Spray

MODELS	FINISH
S72101	Chrome
S72101SRS	Spot Resist Stainless
S72101ORB	Oil Rubbed Bronze
S72101NL	Polished Nickel

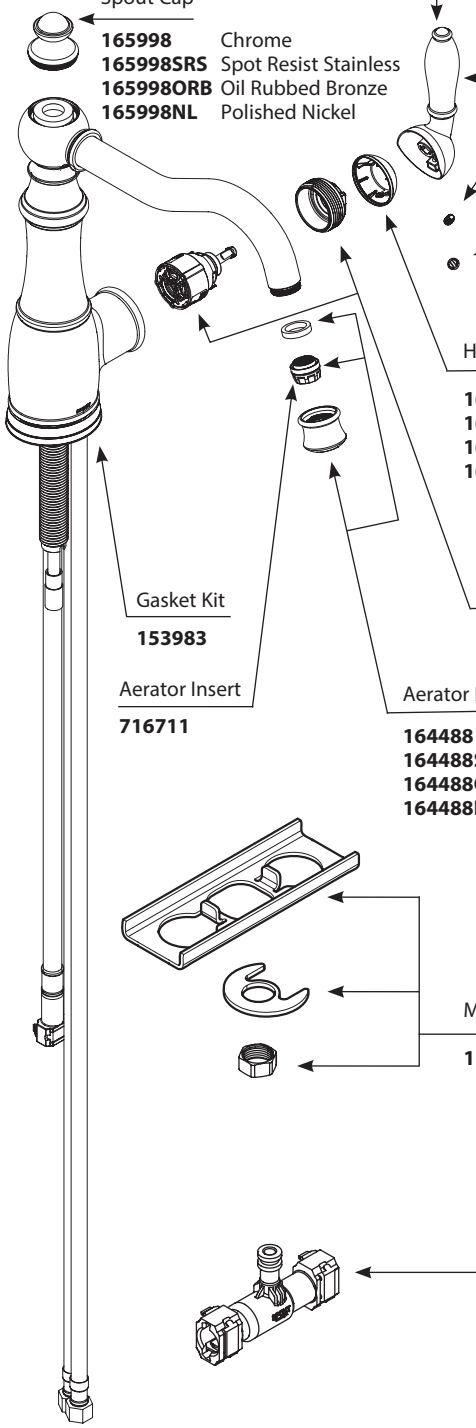

Handle Kit

164487	Chrome
164487SRS	Spot Resist Stainless
164487ORB	Oil Rubbed Bronze
164487NL	Polished Nickel

Spout Cap

165998	Chrome
165998SRS	Spot Resist Stainless
165998ORB	Oil Rubbed Bronze
165998NL	Polished Nickel

Set Screw
(Requires 3/32" hex key)

155023

Plug Button

152859	Chrome
152859CSL	Classic Stainless (use for Spot Resist Stainless)
152859ORB	Oil Rubbed Bronze
152859NL	Polished Nickel

Handle Dome

160659	Chrome
160659SRS	Spot Resist Stainless
160659ORB	Oil Rubbed Bronze
160659NL	Polished Nickel

Cartridge, Cartridge Nut and Screw
Note: Must change nut with cartridge

160657

Gasket Kit

153983

Aerator Insert

716711

Aerator Kit

164488	Chrome
164488SRS	Spot Resist Stainless
164488ORB	Oil Rubbed Bronze
164488NL	Polished Nickel

Mounting Hardware

113173

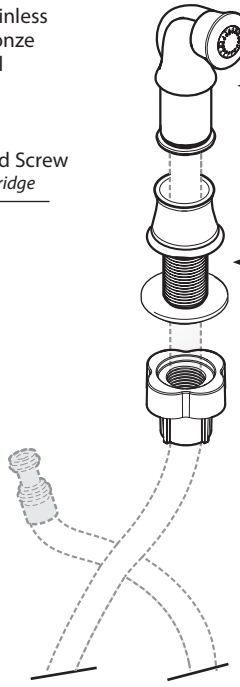

Side Spray

164486	Chrome
164486SRS	Spot Resist Stainless
164486ORB	Oil Rubbed Bronze
164486NL	Polished Nickel

(Side Spray Extension Kit 100816 Available for Thick Deck Installation)

Installation Tool

118305

Diverter

144578

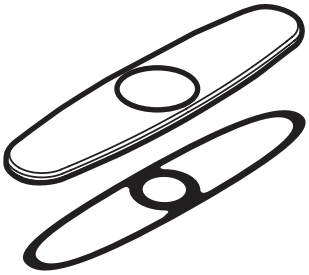

Optional
Deck Plate & Gasket

141002	Chrome
141002SRS	Spot Resist Stainless
141002ORB	Oil Rubbed Bronze

Rev. 2/18

TO ORDER PARTS CALL: 1-800-BUY-MOEN
www.moen.com