MOEN®
COMMERCIAL

Illustrated Parts

Two-Handle Lavatory Faucet		
MODEL	FLOW (gpm/Lpm)	HANDLE STYLE
8215	2.2/8.3	Decal
8215F12	1.2/4.5	Decal
8215F05	0.5/1.9	Decal
8215F03	0.35/1.3	Decal
8215SM	2.2/8.3	Smooth
8215SMF12	1.2/4.5	Smooth
8219	2.2/8.3	Decal
8209	2.2/8.3	Decal

■ **Order by Part Number**

There is more than 1 version of this model.
Page down to identify the version you have.

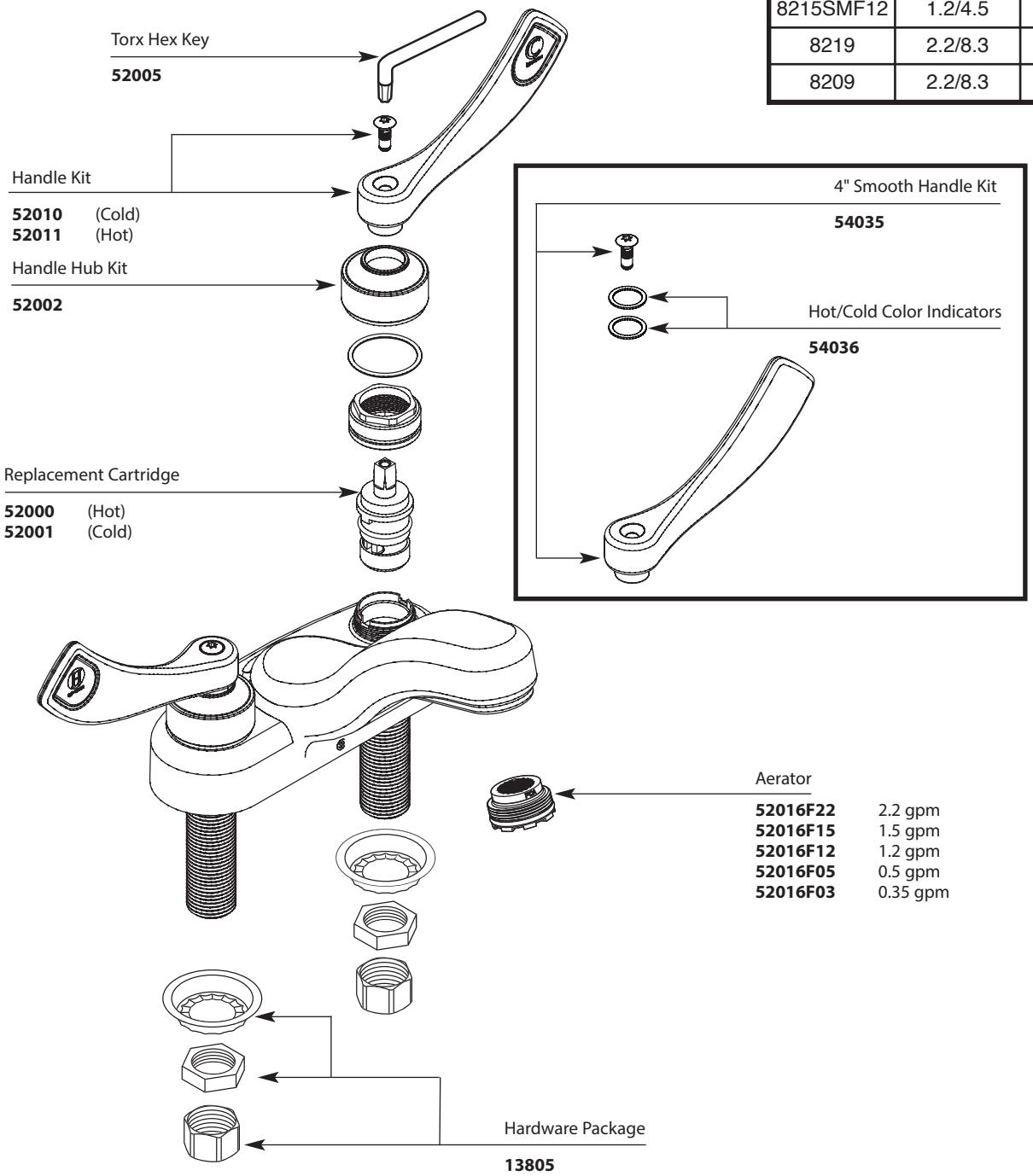

TO ORDER PARTS CALL: 1-800-BUY-MOEN
www.moen.com

MOEN®
COMMERCIAL

Illustrated Parts

■ **Order by Part Number**

Two-Handle Lavatory Faucet

MODEL	HANDLE	FINISH
8209	Lever	Chrome w/Chain Stay
8215	Lever	Chrome
8219	Lever	Chrome

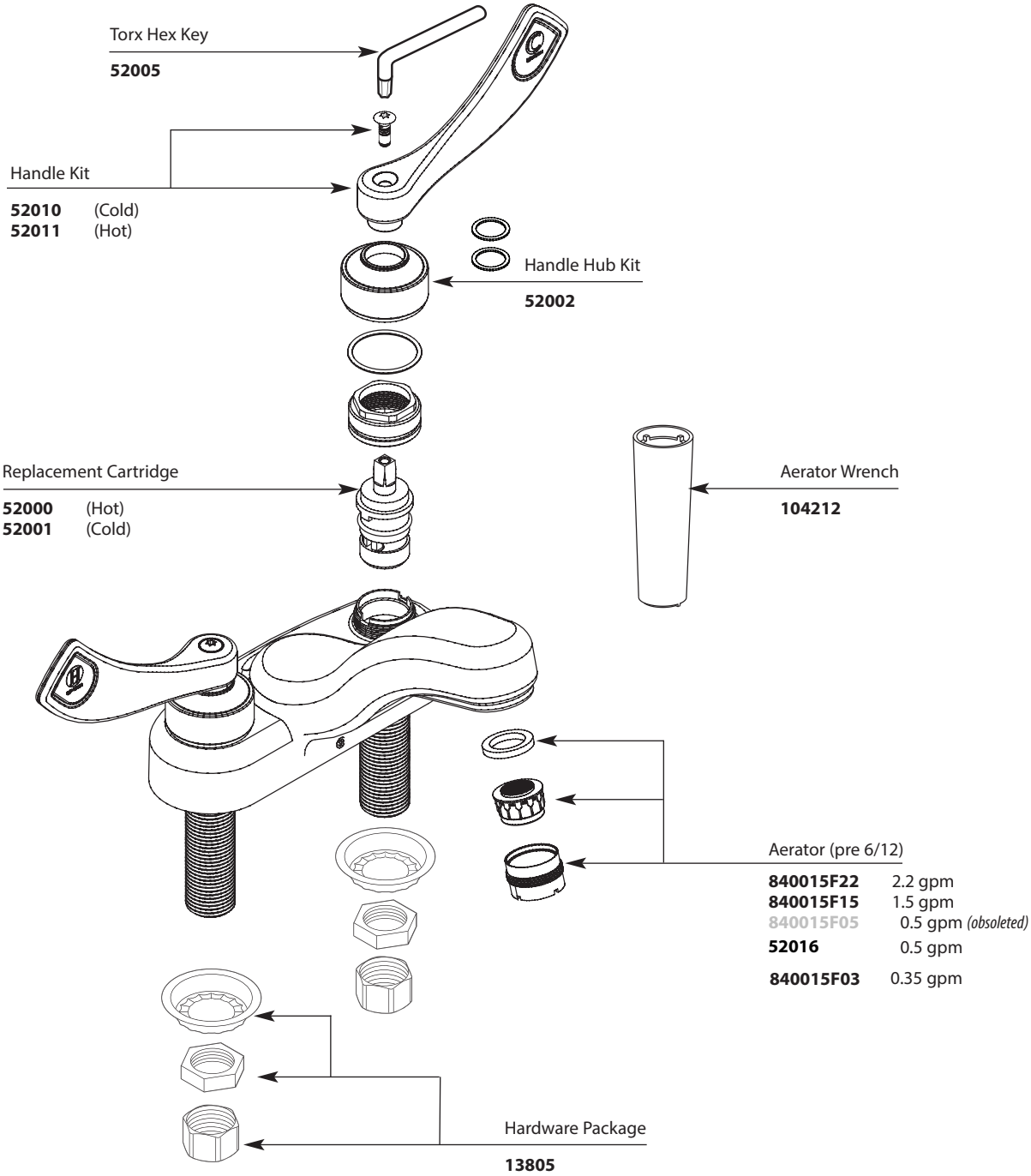

TO ORDER PARTS CALL: 1-800-BUY-MOEN
www.moen.com