ShowerSelect
Thermostatic Trim for 2 Functions, Square
Finishes : **brushed nickel** Part no. : **15763821**

Description

Features

- Select push-button on/off control for 2 outlets
- Thermostatic cartridge
- Start/stop cartridge
- Anti-scald 100° safety stop

Item details

List Price	$ 823.00

Technology

Select SELECT

Compliance

ADA UPC C ® MAP

Product image

Scale drawing

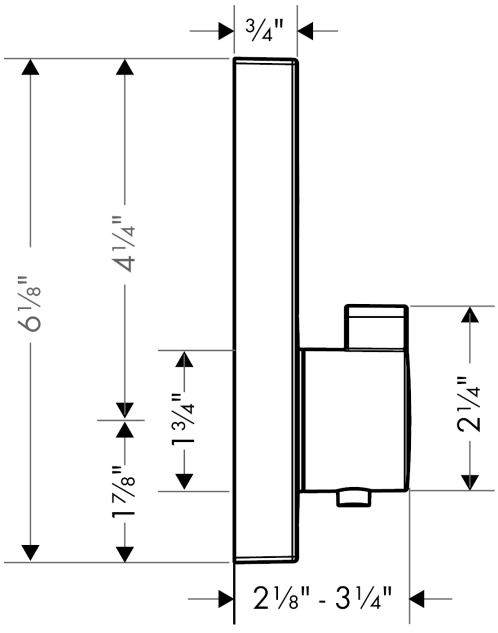

ShowerSelect
Thermostatic Trim for 2 Functions, Square
Finishes : **brushed nickel** Part no. : **15763821**

Exploded drawing

Year of production: **>12/14**

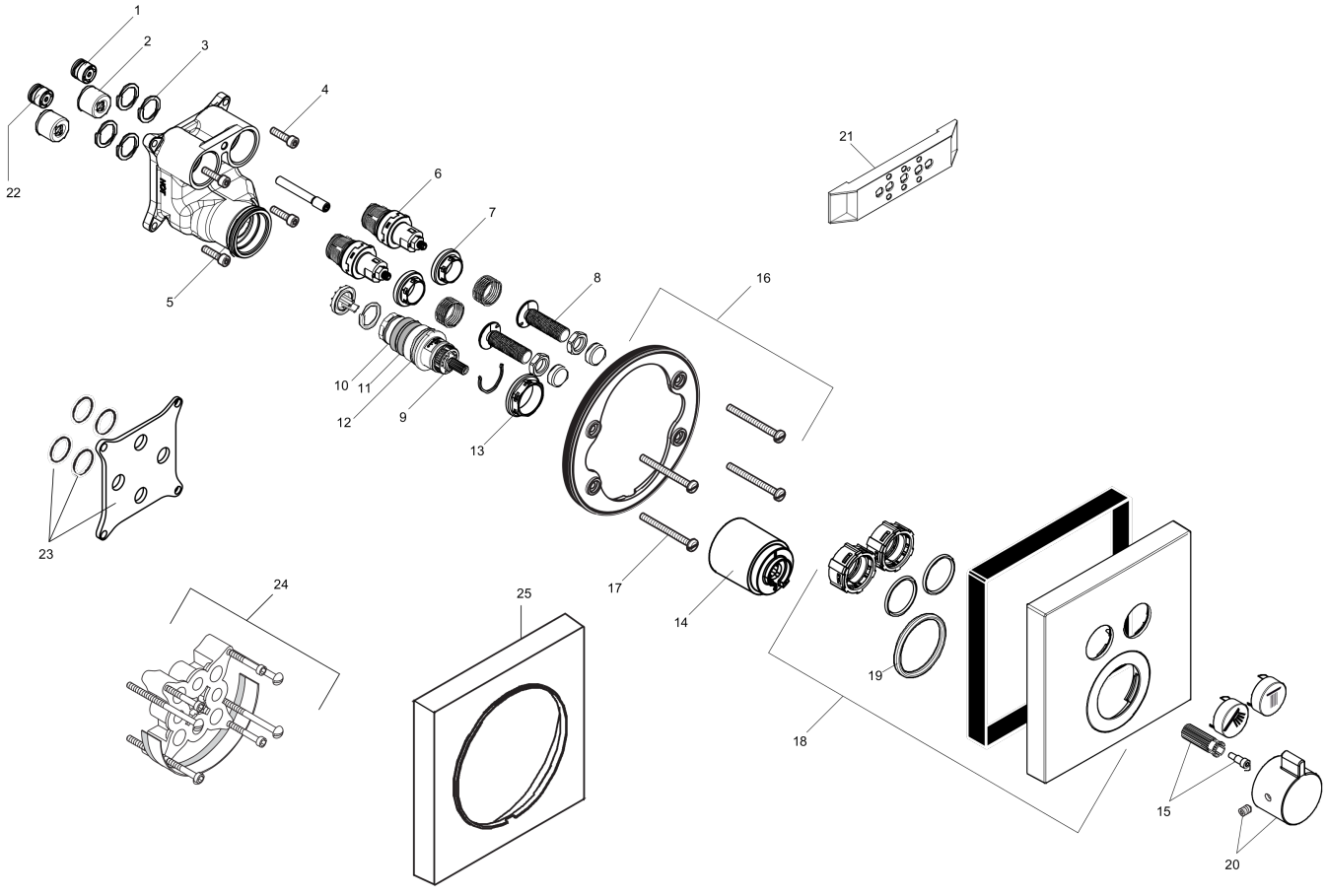

ShowerSelect
Thermostatic Trim for 2 Functions, Square
Finishes : **brushed nickel** Part no. : **15763821**

Spare parts list

Year of production: **>12/14**

Pos.	Description	Part no.	Price	PU
1	non return valve	97980000	-	1
2	noise reduction	94073000	-	1
3	O-ring 16x2	98133000	-	1
4	set of screws	96525000	-	1
5	O-ring 36x2	98156000	-	1
6	shut off unit	95758000	-	1
7	nut	98368000	-	1
8	Select-adapter	92219000	-	1
9	thermostat cartridge	98282001	-	1
10	O-ring 20x1,5	98197000	-	1
11	O-ring 25x1,5	98146000	-	1
12	O-ring 25x2,5	92146000	-	1
13	nut	98913000	-	1
14	sleeve	92216820	-	1
15	handle fixing set	95843000	-	1
16	holder for escutcheon	98793000	-	1
17	set of fixing screws	96454000	-	1
18	escutcheon 155 / 155 mm	92217821	-	1
19	O-ring 44x4	98471000	-	1
20	handle for thermostat	92215821	-	1
21	fit-up aid	92540000	-	1
22	non return valve (pressure-resistant up to 2 MPa)	92594000	-	1
23	compensation set 1°	95521000	-	1
24	extension 25 mm	13595000	-	1
25	extension 22 mm	13593820	-	1
a	shut off unit (special)	92361000	-	1
b	nut and flange	92696000	-	1
c	Grease	90920000	-	1