Focus
Focus 100 Single-Hole Faucet
Finishes : **chrome** Part no. : **04371000**

Description

Features

- Solid brass
- Aerated spray
- Flow: 1.2 GPM
- Ceramic cartridge
- Includes pop-up assembly

Optional accessories

- Base Plate for Contemporary Single-Hole Faucets, 6" (#06490USA)

Item details

List Price	$ 220.00

Technology

Eco Right · Quick Clean · Comfort Zone

Compliance

UPC · WaterSense Meets EPA Criteria · ADA

Product image

Scale drawing

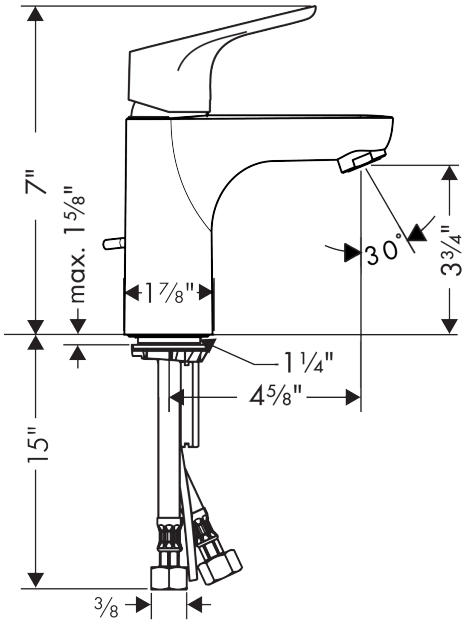

Focus
Focus 100 Single-Hole Faucet
Finishes : **chrome** Part no. : **04371000**

Exploded drawing

Year of production: **>03/12**

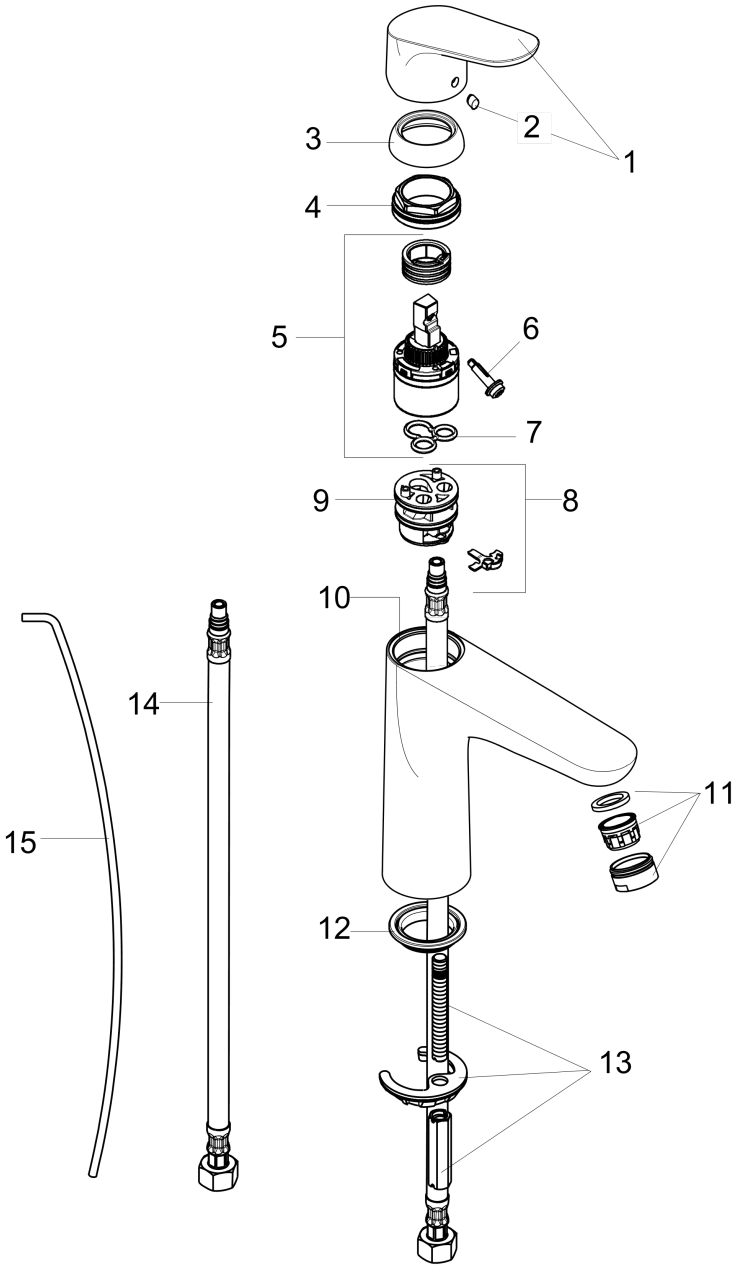

Focus
Focus 100 Single-Hole Faucet
Finishes : **chrome** Part no. : **04371000**

Spare parts list

Year of production: **>03/12**

Pos.	Description	Part no.	Price	PU
1	handle	98532000	-	1
2	screw cover	96338000	-	1
3	flange	97406000	-	1
4	nut	97209000	-	1
5	cartridge, assy	92730000	-	1
6	locking screw for handle	95140000	-	1
7	seal	95008000	-	1
8	adapter for cartridge	98750000	-	1
9	O-Ring 30x2	98186000	-	1
10	O-ring 35x2	92604000	-	1
11	aerator M24x1 (5 l/min)	13185000	-	1
12	seal Ø 42	98722000	-	1
13	fixing set	88508000	-	1
14	connection hose 18½" M8x0,75 3/8"	96321001	-	1
15	pull rod	96657000	-	1
a	pop up waste	88509000	-	1