KOHLER. Faucets

Artifacts™

Single-handle bathroom sink faucet, 1.2 gpm

K-72762-9M

Features

- One-piece, self-contained ceramic disc valve allows both volume and control
- Clicker drain with tailpiece and overflow
- 5-11/16" (144 mm) spout reach
- 1.2 gpm (4.5 lpm) maximum flow rate at 60 psi (4.14 bar)
- Single lever handle allows for both on/off activation and temperature setting
- KOHLER ceramic disc valves exceed industry longevity standards for a lifetime of durable performance
- Laminar flow delivers a graceful stream of water
- Flexible supplies for simplified installation

Material

- Brass
- KOHLER finishes resist corrosion and tarnishing

Installation

- Flexible connections for easy installation
- Single hole

Water Conservation & Rebates

- This product can help a building earn Water Efficiency points in LEED™ Green Building Rating System

Recommended Products/Accessories

K-23726 Drain treatment
K-23723 Faucet cleaner
K-72567 18" Towel Bar
K-72568 24" Towel Bar
K-72570 24" Double Towel Bar
K-72571 Towel Ring
K-72572 Robe Hook
K-72573 Pivoting toilet paper holder
K-72576 Toilet paper carriage
K-75449 Escutcheon plate

WaterSense Meets EPA Criteria Certified by IAPMO R&T

ADA	CSA B651	OBC

Codes/Standards

ASME A112.18.1/CSA B125.1
NSF/ANSI/CAN 61
NSF/ANSI/CAN 372
All applicable US Federal and State material regulations
DOE - Energy Policy Act 1992
EPA WaterSense™
California Energy Commission (CEC)
ADA
ICC/ANSI A117.1
CSA B651
OBC

KOHLER® Faucet Lifetime Limited Warranty

See website for detailed warranty information.

Available Colors/Finishes

Color tiles intended for reference only.

Color	Code	Description
	CP	Polished Chrome
	SN	Vibrant™ Polished Nickel
	BN	Vibrant™ Brushed Nickel
	BV	Vibrant™ Brushed Bronze
	2BZ	Oil-Rubbed Bronze

KOHLER. Faucets

Artifacts™

Single-handle bathroom sink faucet, 1.2 gpm

K-72762-9M

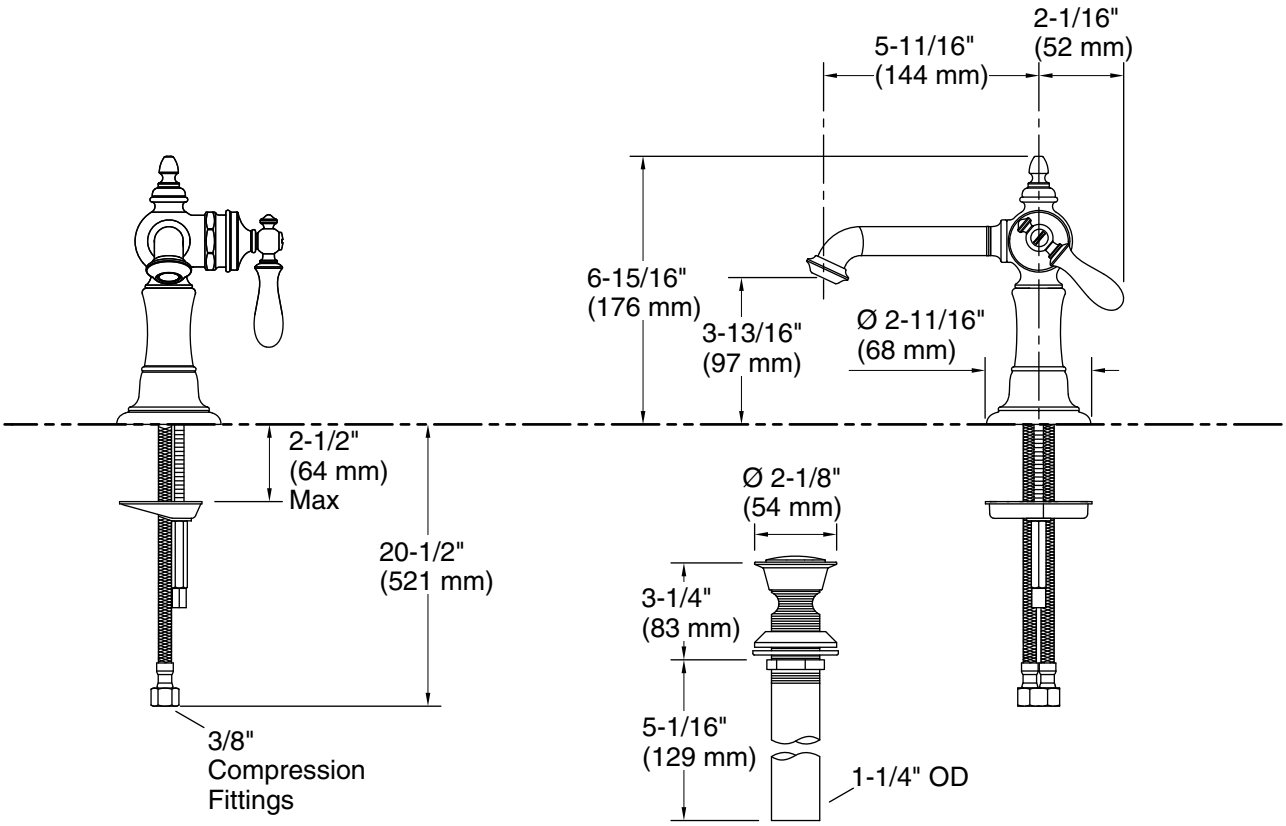

Technical Information

All product dimensions are nominal.

Faucet:

Flow rate:	1.2 gal/min (4.5 l/min)
Pressure:	60 psi (4.1 bar)
Drain included:	No
Drain with overflow:	No

Spout:

Spout reach:	5-11/16" (145 mm)

Notes

Install this product according to the installation guide.

ADA compliant for handles only.

ADA, OBC, CSA B651 compliant when installed to the specific requirements of these regulations.