RIDGID®

Operator's Manual

SeekTech®

SR™ Locators

SR-20

SR-24

⚠ WARNING!

Read this Operator's Manual carefully before using this tool. Failure to understand and follow the contents of this manual may result in electrical shock, fire, and/or serious personal injury.

SR-24 is used to refer to both the SR-24 and the SR-20 throughout this manual. The SR-24 has integrated GPS and Bluetooth® technology. The SR-20 does not, but is otherwise functionally identical.

Table of Contents

Introduction
Regulatory Statements 4
Safety Symbols 4
General Safety Rules
Work Area Safety 5
Electrical Safety 5
Personal Safety 5
Equipment Use and Care 6
Pre-Operation Inspection
Specific Safety Information
SR-24/SR-20 Safety 7
System Overview
Description 7
Standard Equipment 8
Components 9
Operating Instructions
Quick Start 10
Powering the System 11
Receiver Operation Modes 11
Audio 12
Display Elements 13
Understanding the Display 17
Active Line Tracing
Direct Connect 19
Inductive Clamp 19
Induction 20
Induction and Air-Coupling 20
Tracing the Target Line 21
Confirming Accuracy 21
Passive Line Tracing
Passive Power 22
Passive Radio Frequency Broadband 22
OmniSeek 23
Confirming Accuracy 23
Sonde Locating
Locating the Sonde 24
Depth
Depth Verification Test 27
Depth Average 27
Improving and Confirming Accuracy
Signal Strength 29
Tracing Circuit 31
Confirming Accuracy 31

Main Menu
Setting the Frequency 33
Bluetooth 34
Connecting to a Transmitter with Bluetooth 37
Transmitter Control Screen 38
SD Card 40
Units of Measurement 44
LCD Contrast 44
Custom Frequencies 44
Settings
IO Menu 48
SR-24 GPS 49
Customizing Display Elements 51
Information Options 54
Maintenance and Support
Cleaning 55
Accessories 55
Transportation and Storage 55
Service and Repair 56
Disposal 56
Troubleshooting 57
Appendices
Appendix A: Glossary of Terms 58
Appendix B: Main Menu Map 60
Appendix C: Data Logging Abbreviations 61

Introduction

The warnings, cautions, and instructions discussed in this operator's manual cannot cover all possible conditions and situations that may occur. It must be understood by the operator that common sense and caution are factors which cannot be built into this product, but must be supplied by the operator.

Regulatory Statements

The EC Declaration of Conformity (890-011-320.10) will accompany this manual as a separate booklet when required.

This device complies with Part 15 of FCC Rules. Operation is subject to the following two conditions: (1) this device may not cause harmful interference, and (2) this device must accept any interference received, including interference that may cause undesired operation.

Contains Transmitter Module FCC ID: QOQWT41.

Safety Symbols

In this operator's manual and on the product, safety symbols and signal words are used to communicate important safety information. This section is provided to improve understanding of these signal words and symbols.

This is the safety alert symbol. It is used to alert you to potential personal injury hazards. Obey all safety messages that follow this symbol to avoid possible injury or death.

⚠ DANGER

DANGER indicates a hazardous situation which, if not avoided, will result in death or serious injury.

⚠ WARNING

WARNING indicates a hazardous situation which, if not avoided, could result in death or serious injury.

⚠ CAUTION

CAUTION indicates a hazardous situation which, if not avoided, could result in minor or moderate injury.

NOTICE NOTICE indicates information that relates to the protection of property.

This symbol means read the operator's manual carefully before using the equipment. The operator's manual contains important information on the safe and proper operation of the equipment.

This symbol means always wear safety glasses with side shields or goggles when handling or using this equipment to reduce the risk of eye injury.

This symbol indicates the risk of electrical shock.

General Safety Rules

⚠ WARNING

Read all safety warnings and instructions. Failure to follow the warnings and instructions may result in electric shock, fire, and/or serious injury.

SAVE THESE INSTRUCTIONS!

Work Area Safety

- **Keep your work area clean and well lit.** Cluttered or dark areas invite accidents.
- **Do not operate equipment in explosive atmospheres, such as in the presence of flammable liquids, gases, or dust.** Equipment can create sparks which may ignite the dust or fumes.
- **Keep children and bystanders away while operating equipment.** Distractions can cause you to lose control.

Electrical Safety

- **Avoid body contact with earthed or grounded surfaces such as pipes, radiators, ranges, and refrigerators.** There is an increased risk of electrical shock if your body is earthed or grounded.
- **Do not expose equipment to rain or wet conditions.** Water entering equipment will increase the risk of electrical shock.
- **Keep all electrical connections dry and off the ground.** Do not touch equipment or plugs with wet hands to reduce the risk of electrical shock.

Personal Safety

- **Stay alert, watch what you are doing, and use common sense when operating equipment.** Do not use equipment while you are tired or under the influence of drugs, alcohol, or medication. A moment of inattention while operating equipment may result in serious personal injury.
- **Use personal protective equipment.** Always wear eye protection. The appropriate use of protective equipment such as a dust mask, non-skid safety shoes, a hard hat, and hearing protection will reduce personal injuries.
- **Do not overreach.** Keep proper footing and balance at all times. This enables better control of the equipment in unexpected situations.
- **Dress properly.** Do not wear loose clothing or jewelry. Loose clothes, jewelry, and long hair can be caught in moving parts.

⚠ DANGER

- **Avoid traffic.** Pay close attention to moving vehicles when using on or near roadways. Wear high-visibility clothing or reflector vests.

Equipment Use and Care

- **Do not force equipment.** Use the correct equipment for your application. The correct equipment will do the job better and safer at the rate for which it is designed.
- **Do not use equipment if the power switch does not turn it on and off.** Any equipment that cannot be controlled with the power switch is dangerous and must be repaired.
- **Disconnect the plug from the power source and/or the battery pack from the equipment before making adjustments, changing accessories, or storing.** Preventive safety measures reduce the risk of injury.
- **Store idle equipment out of the reach of children and do not allow persons unfamiliar with the equipment or these instructions to operate the equipment.** Equipment can be dangerous in the hands of untrained users.
- **Maintain equipment.** Check for misalignment or binding of moving parts, missing parts, breakage of parts, and any other condition that may affect the equipment's operation. If damaged, have the equipment repaired before use. Many accidents are caused by poorly maintained equipment.
- **Use the equipment and accessories in accordance with these instructions; taking into account the working conditions and the work to be performed.** Use of the equipment for operations different from those intended can result in a hazardous situation.
- **Use only accessories that are recommended by the manufacturer for your equipment.** Accessories that may be suitable for one piece of equipment may become hazardous when used with other equipment.
- **Keep handles dry, clean, and free from oil and grease.** This allows for better control of the equipment.

Pre-Operation Inspection

⚠ WARNING

To reduce the risk of serious injury from electrical shock or other causes, and to prevent damage to your equipment, inspect all equipment and correct any problems before each use.

To inspect all equipment, follow these steps:

1. Power off your equipment.
2. Disconnect and inspect all cords, cables, and connectors for damage or modification.
3. Clean any dirt, oil, or other contamination from your equipment to ease inspection and to prevent it from slipping from your grip during transportation or use.
4. Inspect your equipment for any broken, worn, missing, misaligned or binding parts, or any other condition which might prevent safe, normal operation.
5. Check your work area for the following:
   - Adequate lighting.
   - The presence of flammable liquids, vapors, or dust that may ignite. If present, do not work in area until sources have been identified and corrected. The equipment is not explosion proof. Electrical connections can cause sparks.
   - A clear, level, stable, and dry place for the operator. Do not use the equipment while standing in water.
6. Examine the job to be done and determine the correct equipment for the task.
7. Observe the work area and erect barriers or cones as necessary to keep bystanders away and, if near traffic, alert drivers.

Specific Safety Information

⚠ WARNING

This section contains important safety information that is specific to the SeekTech SR-24/SR-20. Read these precautions carefully before using the SR-24/SR-20 to reduce the risk of electrical shock, fire, or other serious personal injury.

SAVE ALL WARNINGS AND INSTRUCTIONS FOR FUTURE REFERENCE!

SR-24/SR-20 Safety

- **Read and understand this operator's manual and the instructions for any other equipment in use including, but not limited to, transmitters, clamps, and sondes.** Failure to follow all instructions and warnings may result in property damage and/or serious personal injury.
- **Do not use this equipment if operator or SR-24/SR-20 is standing in water.** Operating the SR-24/SR-20 while in water increases the risk of electrical shock.
- **Do not use where a danger of high voltage contact is present.** The SR-24/SR020 is not designed to provide high voltage protection and isolation.
- **Exposing the utility is the only way to be certain of its location.** Several utilities may be underground in the same area. Be sure to follow local guidelines and One Call service procedures.

NOTICE **Ridge Tool Company, its affiliates and suppliers, will not be liable for any injury or any direct, indirect, incidental or consequential damages sustained or incurred by reason of the use of the SR-24/SR-20.**

System Overview

Description

SR-24 is used to refer to both the SR-24 and the SR-20 throughout this manual. The SR-24 has integrated GPS and Bluetooth® technology. The SR-20 does not, but is otherwise functionally identical.

The RIDGID SeekTech SR-24 receiver gives utility locating professionals the information they need to confidently determine the position of underground utilities.

The SR-24's Omnidirectional antenna system measures electromagnetic signals and calculates the signal's orientation strength, depth, and degree of distortion or interference. The display and the multidimensional audio cues give you a locating experience that is immediately intuitive.

For an added degree of confidence, the SR-24 continuously monitors the electromagnetic field for interference from conflicting signals that could distort its shape. When the SR-24 detects distortion, the SR-24 emits audio cues and displays on-screen guidance so that appropriate action can be taken to avoid mismarking the utility's position.

Built on the trusted and time tested SR-20 platform, the SR-24 has integrated GPS and Bluetooth® technology, giving a real-time stream of data to Bluetooth enabled devices, including smart phones, tablets, and high precision GPS instruments.

SeekTech SR-24 and SR-20 Specifications	
Dimensions	
Length	285 mm [11.2 in]
Width	109 mm [4.3 in]
Height	790 mm [31.1 in]
Weight without batteries	1.5 kg [3.3 lb]
Power	
Power rating	6 V, 375 mA (SR-20) 6 V, 450 mA (SR-24)
Battery type	Four size C, 1.5 V alkaline (ANSI/NEDA 14 A, IEC LR14), or 1.2 V NiMH or Ni-Cad rechargeable batteries
Power consumption	2.25 W (SR-20) 2.7 W (SR-24)
LCD	
Resolution	Monochrome 240 × 160 pixels
Display size	45 mm × 65 mm [1.8 in × 2.6 in]
Contrast ratio	700:1
Brightness	500 Cd/m2
Environmental	
Operating temperature	-20°C to 50°C [-4°F to 122°F]
Storage temperature	-20°C to 60°C [-4°F to 140°F]
Relative humidity	5% to 95%
USB	
Cable	Mini-B, 1.8 m [6 ft]
Type	2.0
SD Card	Micro 16 GB

SeekTech SR-24 Specifications	
Bluetooth	
Type	Class 1
Profile	RFCOMM
Transmit power	19.1 dBm
Operating spectrum	2402 – 2480 MHz
Receiver sensitivity	-92 dBm
Operating range	Up to 1,000 m [3,281 ft]
GPS	
Processor	48-channel SiRFstarIV GSD4e
Accuracy	< 2.5 m [8.2 ft]**
Tracking	-163 dBm
Autonomous acquisition	-147 dBm
Operating spectrum	1559 – 1610 MHz

***According to the documentation supplied by the manufacturer of the internal SiRFstarIV GPS module, its nominal accuracy is "< 2.5 m (65 percent, 24 hour static, -130 dBm)."*

Standard Equipment

- Operator's manual
- Instructional DVD
- Four size C alkaline batteries
- Marker chips
- Mini-B USB cable

Components

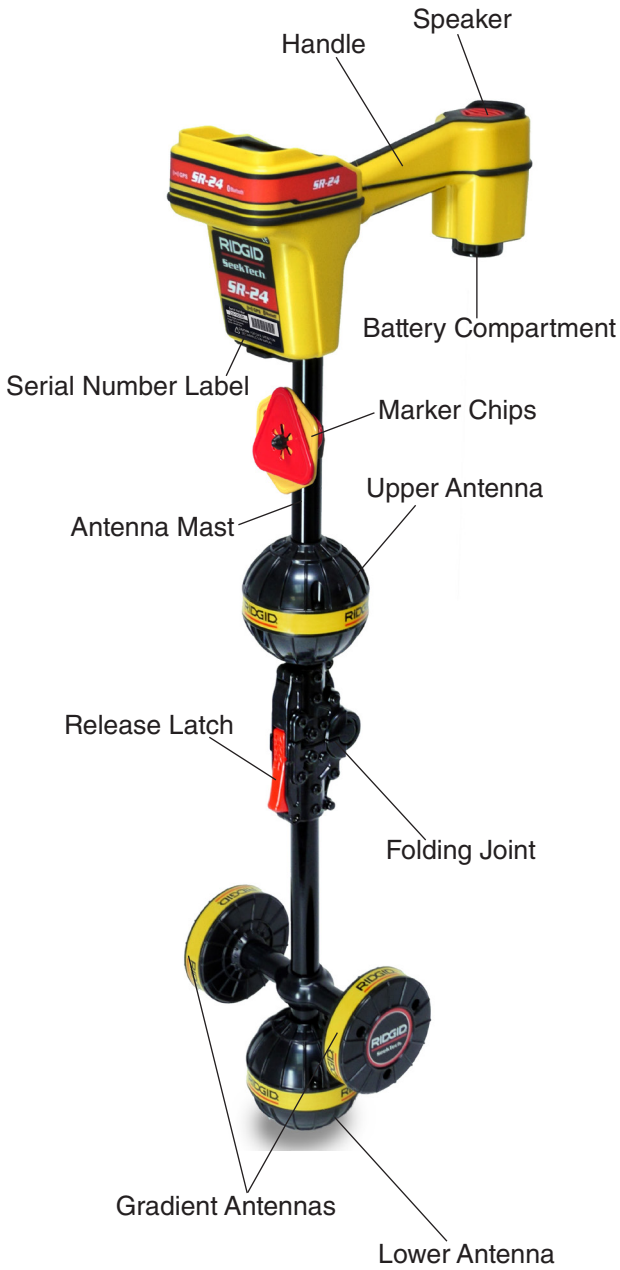

Folding Antenna Mast

Unfold the antenna mast and lock the folding joint into place. When the job is complete, press the red release latch to fold the antenna mast. Secure the folding mast into the clip for storage or transportation.

NOTICE **You must unfold the antenna mast to use the SR-24. To prevent damage to the mast, do not snap or whip the SR-24 to open or close it. Only open and close the SR-24 manually.**

SR-24 Keypad	
Key	**Function**
	Power Key/Right Arrow Key
	Frequency Key/Left Arrow Key
	Menu Key
	Up Arrow Key
	Down Arrow Key
	Volume Key
	Select Key

Operating Instructions

⚠ DANGER

Exposing the utility prior to digging is the only way to verify its existence, location, and depth. If excavating a utility, periodically recheck the measured depth and position to avoid damaging the utility and to identify additional utility signals that may have been overlooked.

Quick Start

SR-24 is used to refer to both the SR-24 and the SR-20 throughout this manual. The SR-24 has integrated GPS and Bluetooth technology. The SR-20 does not, but is otherwise functionally identical.

The SR-24 functions by measuring an electromagnetic signal and estimating the position of its source. The SR-24 can locate the signal transmitted by a RIDGID SeekTech transmitter or Sonde, other manufacturer's transmitters, or passive signals from surrounding metallic conductors.

1. Insert four fully charged, size C, alkaline batteries into the battery compartment and turn the knob clockwise to close.
2. Unfold the antenna mast and lock it into place.
3. Power on by pressing the Power Key .
4. Set the receiver and the transmitter to the same frequency.
5. Begin tracing the line at a logical starting place such as the transmitter hook up point.

Note: Refer to the Active Line Tracing, Passive Line Tracing, and Sonde Locating sections that follow for information on how to locate buried utilities with the SR-24.

Powering the System

Battery operation time varies with battery rating and use. Four size C, alkaline batteries can power the SR-24 for 10 to 15 hours.

NOTICE **Use batteries that are all the same type. Mixing alkaline and rechargeable batteries can cause over heating and battery leakage.**

To install or change the batteries, follow these steps:

1. Turn the knob on the battery compartment counter-clockwise and pull straight out.
2. Insert four size C batteries as shown on the label inside the battery compartment.

   Note: Make sure the batteries drop completely into the compartment.

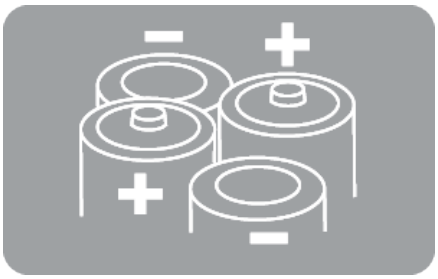

3. Fit the cover back onto the battery compartment, press the cover down, and turn the knob clockwise to close.

Low Battery Warning

When the batteries are low, a low battery warning appears on the screen and a tone sounds every 10 minutes before the SR-24 powers off. When the low battery warning appears, replace the batteries.

Note: If you are using rechargeable batteries, the voltage may drop quickly at the end of its charge resulting in a shortened warning period before power failure.

Receiver Operation Modes

The SR-24 can operate using two modes: Line Trace Mode and Sonde Mode.

Line Trace Mode

In Line Trace Mode you can Active Line Trace by intentionally applying a signal onto the target line through metal-to-metal conduction or non metal-to-metal induction with a transmitter.

Also in Line Trace Mode, you can Passive Line Trace by detecting signal energy coupled onto metallic conductors from nearby energy sources such as power lines. Passive Line Trace Mode includes Passive Power, Radio Broadband, and OmniSeek Broadband Modes. Broadband frequencies target any signal in a range of frequencies.

Note: Active signals within a broadband range are also detected.

Line Trace Mode	
Active Frequencies	
Default	128 Hz 1 kHz 8 kHz 33 kHz
User Programmable	10 Hz – 35 kHz
Passive Frequencies	
Default North America	60 Hz^{x9} < 4 kHz
Default Europe	50 Hz^{x9} < 4 kHz
Default Japan	50 Hz^{x9} 60 Hz^{x9} < 4 kHz
Power Preprogrammed	50 Hz 50 Hz^{x5} 50 Hz^{x9} 60 Hz 60 Hz^{x5} 60 Hz^{x9} 100 Hz 120 Hz
User Programmable	10 Hz – 35 kHz
Radio Frequency Broadband	4 kHz – 15 kHz > 15 kHz
OmniSeek Broadband Modes (All three simultaneously)	< 4 kHz 4 kHz – 15 kHz > 15 kHz

Sonde Mode

Use Sonde Mode to locate a sonde that is inside a pipe, conduit, or tunnel.

Sonde Mode Frequencies	
Default	512 Hz
Preprogrammed	16 Hz 640 Hz 850 Hz 8 kHz 16 kHz 33 kHz
User Programmable	10 Hz – 35 kHz

Note: Sonde Mode and Line Trace Mode can sometimes use the same frequency. Make sure the mode icon next to the frequency that you are using is the mode you intend to be locating with. Depth measurements will be in error if the incorrect mode is used.

User Programmable Custom Frequencies

The SR-24 comes preprogrammed with a selection of frequencies that are set by default in Active Line Trace Mode, Passive Line Trace Mode, and Sonde Mode. You can also create custom frequencies to use the SR-24 with transmitters from most manufacturers.

Note: Refer to the Custom Frequencies section for more information.

Audio

Volume Control

To increase and decrease the volume level of the SR-24's audio cues, first press the Volume Key. You can then either press the Volume Key to cycle through volume settings, or press the Volume Key once and use the Up and Down Arrow Keys to adjust the volume settings. Press the Select Key to exit the volume settings screen.

In all modes, if the sound level reaches its maximum frequency range (pitch), it rescales to the middle of its frequency range. The modulation of frequency is used to indicate signal strength.

Line Trace Modes

The SR-24 emits sounds related to the estimated position of the utility. If the utility's estimated position is on the left side of the receiver, you will hear a warbling sound. If the utility's estimated position is on the right side of the receiver, you will hear the same warbling sound plus short clicks.

In Active Line Trace Mode and Passive Line Trace Mode, the SR-24 emits a higher pitch as it approaches the target. The rising pitch indicates an increasingly strong Signal Strength.

When local conditions distort the shape of the signal field, the Tracing Line is fuzzy and the audio contains static. The degree of fuzziness and the amount of static in the audio reflect the amount of distortion detected in the signal field.

Sonde Mode

In Sonde Mode the pitch rises and falls relative to changes in the Signal Strength. As the SR-24 moves away from the sonde, the pitch falls. As the SR-24 moves closer to the sonde, the pitch rises.

Display Elements

Line Trace Mode Display

The display elements shown below appear in Passive Line Trace Mode, Active Line Trace Mode, and Radio Broadband Mode.

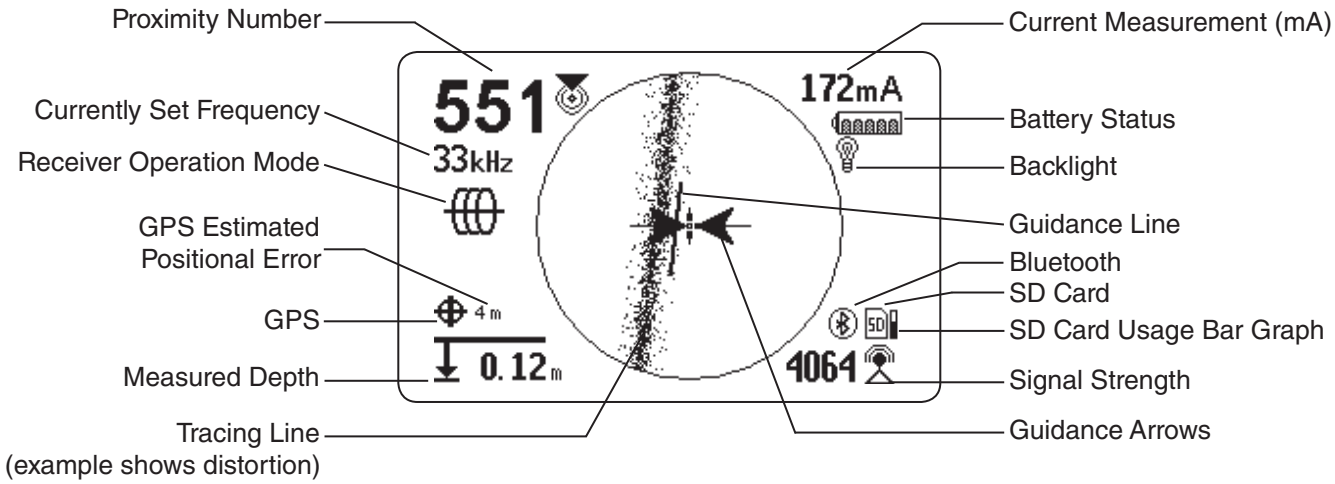

Line Trace Mode Display Elements		
Icon	**Name**	**Description**
	Active Line Trace Mode	The Active Line Trace icon indicates the SR-24 is set to an Active Line Trace frequency.
	Passive Power Line Trace Mode	The Passive Line Trace icon indicates the SR-24 is set to a Passive Power Line Trace frequency.
	Passive Radio Frequency Broadband Line Trace Mode	The Passive Radio Frequency Broadband Line Trace icon indicates the SR-24 is set to a Passive Radio Frequency Broadband Line Trace frequency.
	Passive OmniSeek Line Trace Mode	The Passive OmniSeek Line Trace icon indicates the SR-24 is set to a Passive OmniSeek Line Trace frequency range. *Refer to the OmniSeek section for more information about OmniSeek Line Tracing.*
	Proximity Number	The Proximity Number represents the nearness of the target line to the SR-24. The larger the number, the closer you are to the target line.
172mA	Current Measurement (mA)	Current Measurement (mA) appears in miliamps when the SR-24 is directly over the line.
	Signal Strength	Strength of the signal detected by the Omnidirectional antennas. Observe the Signal Strength to determine the maximum signal strength. At the maximum signal strength, the receiver is over the target line.
	Signal Angle	Signal Angle appears in place of Current Measurement (mA) when the detected signal is at an angle greater than 35°.
>30m	Measured Depth	Measured Depth shows the approximate depth of the target line. The depth appears in either meters (m) or feet (ft). In addition to the measured depth reading, Depth Average displays a Depth Average Report on screen. *Refer to the Depth Average section for more information.*

Line Trace Mode Display Elements		
Icon	**Name**	**Description**
	Tracing Line	The orientation and offset of the Tracing Line indicate the direction of the target line relative to the position of the receiver. The Tracing Line Distortion Response is enabled by default. When the Tracing Line Distortion Response is enabled the Tracing Line also represents the amount of distortion detected by the receiver and the approximate axis of the target line. Increasing levels of field distortion are represented by increasing degrees of fuzziness.
	Distortion Line	The Distortion Line represents the signal from the Upper Antenna node. Compare the Tracing Line and the Distortion Line to estimate the degree of distortion on the signal. The Distortion Line is disabled by default and only appears if the Tracing Line Distortion response is disabled.
	Guidance Arrows	When the Guidance Arrows are touching, they indicate the point where the strength of the field is equal on both sides of the receiver.
	Guidance Line	The Guidance Line shows the alignment of the Tracing Line and when the orientation of the SR-24 is close to the orientation of the utility.
	Cross Hairs	The Cross Hairs are placed at the center of the Active View Area to represent the receiver's location.
	Rotation Arrows	When the receiver is out of alignment with the target line, two rotation arrows appear to indicate the direction you should turn the receiver to realign with the target line. Correct orientation of the receiver is required for the Guidance Arrows and Guidance Line to function properly. The Rotation Arrows only appear when the receiver is not in line with the target line.
	SD Card and Usage Bar Graph	The SD Card and Usage Bar Graph icon indicates the SR-24 is logging to the installed SD Card. The Usage Bar Graph shows disk space usage.
	GPS	The GPS icon indicates the internal GPS feature is enabled.
19'	GPS Estimated Positional Error	GPS Estimated Positional Error is the number next to the GPS icon. It indicates the Estimated Positional Error of the internal GPS. Refer to the SR-24 GPS section for more information.
	No GPS Signal Lock	Internal GPS signal is not locked and is searching for satellites.
	Battery Status	The Battery Status icon indicates the amount of charge remaining in the batteries.
	Backlight	The Backlight icon indicates the Backlight is on.
	Bluetooth	The Bluetooth icon indicates the Bluetooth feature is enabled and the SR-24 is connected to and paired with a Bluetooth enabled device.

Sonde Mode Display

The display elements shown below appear in Sonde Mode .

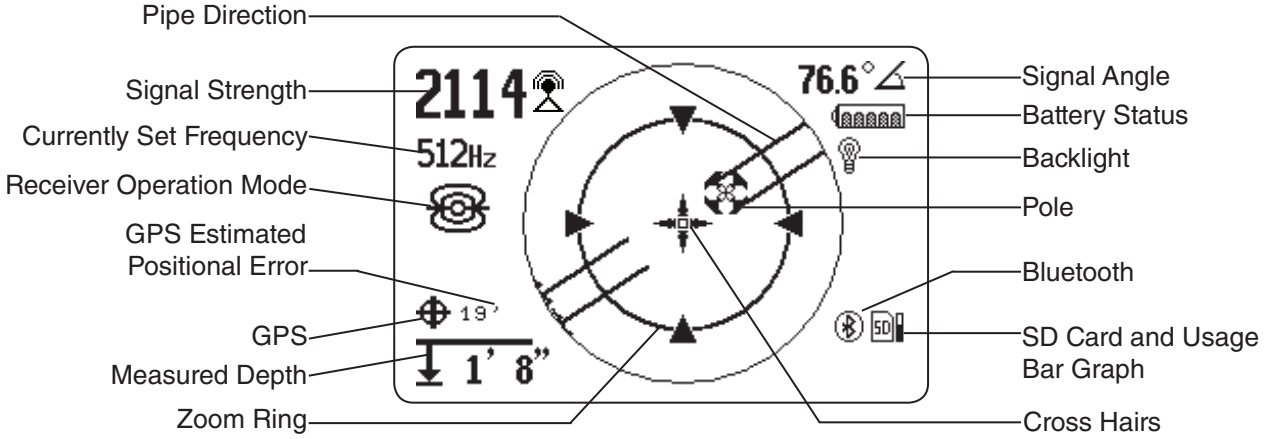

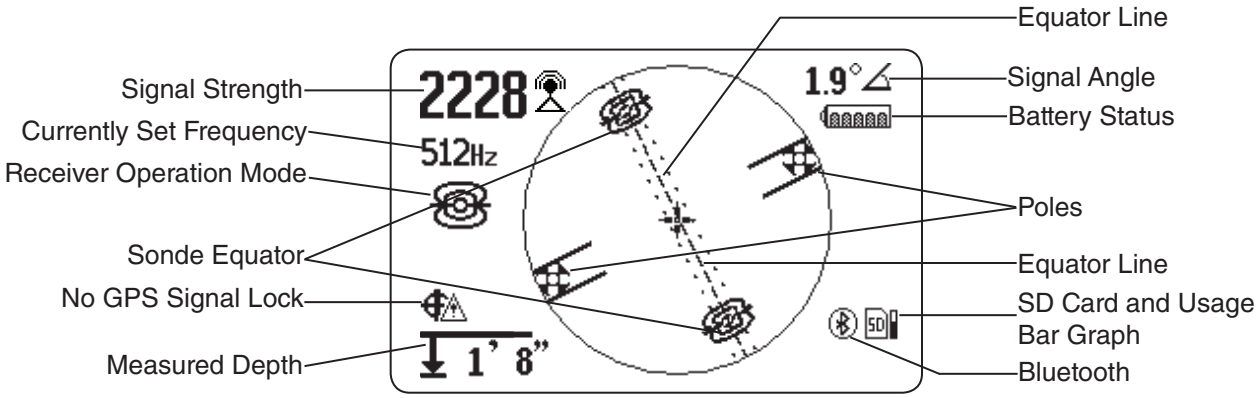

Sonde Mode Display Elements		
Icon	**Name**	**Description**
	Sonde Mode	The sonde icon underneath the currently set frequency, indicates the SR-24 is set to a sonde frequency.
	Signal Strength	Strength of the signal detected by the omnidirectional antennas. Observe the signal strength to determine the maximum signal strength.
	Signal Angle	The signal angle displays the measured polar angle of the SR-24 to the sonde dipole field.
>30m	Measured Depth	Measured depth shows the approximate depth of the target line. The depth appears in either meters (m) or feet (ft).
	Pole	The pole icon represents the location of a pole of the sonde's dipole field.
	Cross Hairs	The cross hairs are placed at the center of the active view area to represent the receivers location.
	Pipe Direction	The pipe direction represents the approximate orientation of the sonde's axis.

Sonde Mode Display Elements		
Icon	**Name**	**Description**
	Sonde Equator	Two sonde equator icons appear along the equator line once the first pole has been located.
	Equator Line	The equator line represents the equator of the sonde's field.
	Zoom Ring	The Zoom Ring appears when the receiver moves close to one of the Poles.
	SD Card and Usage Bar Graph	The SD Card and Usage Bar Graph icon indicates the SR-24 is logging to the installed SD Card. The Usage Bar Graph shows disk space usage.
	GPS	The GPS icon indicates the internal GPS feature is enabled.
19'	GPS Estimated Positional Error	GPS Estimated Positional Error is the number next to the GPS icon. It indicates the Estimated Positional Error of the internal GPS. *Refer to the SR-24 GPS section for more information.*
	No GPS Signal Lock	Internal GPS signal is not locked and is searching for satellites.
	Battery Status	The Battery Status icon indicates the amount of charge remaining in the batteries.
	Backlight	The Backlight icon indicates the Backlight is on.
	Bluetooth	The Bluetooth icon indicates the Bluetooth feature is enabled and the SR-24 is connected to and paired with a Bluetooth enabled device.

Note: Refer to the Customizing Display Elements section for instructions on how to customize display elements and for information about additional display options.

Understanding the Display

Refer to the SR-20 Instructional Video for a demonstration of how the display elements work during a locate and to see how they work together to make your locates accurate and efficient. The video is on a DVD included with the SR-24 manual pack or can be viewed online:

www.RIDGID.com/us/en/instructional-videos

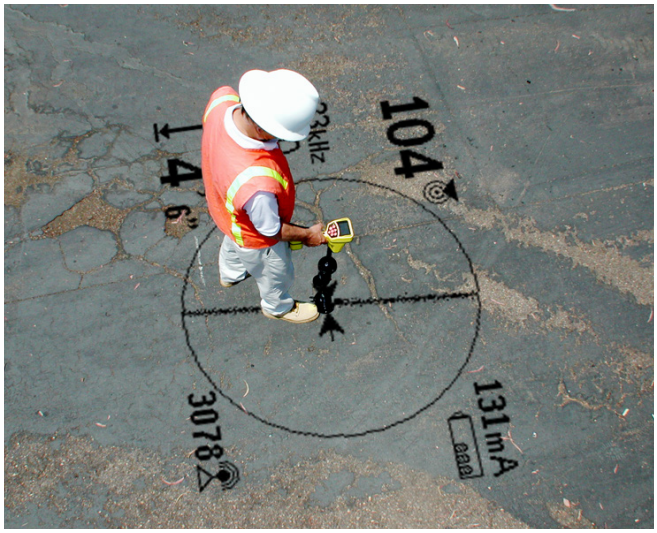

Tracing Line

The Tracing Line shows the location and direction of the target line's signal, change in direction of the target line, and the amount of distortion on the target line.

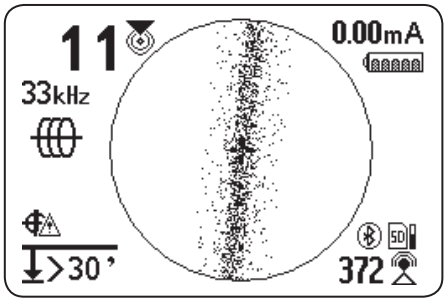

If the signal is clear and the detected field is undistorted, the following occurs:

- The Tracing Line appears as a clear, single line.
- The Guidance Arrows point to the center of the screen.
- The Guidance Line aligns with the Tracing Line.

If the Tracing Line appears fuzzy, the field may be distorted by interfering electromagnetic fields. As the distortion increases, the Tracing Line appears increasingly fuzzy and the audio cue increases static noise.

Guidance Arrows and the Guidance Line

The Guidance Arrows reflect the difference in the Signal Strength measurement made on either side of the SR-24. They point in the direction of the strongest signal. The Guidance Line appears between the arrows when the receiver is aligned with the target line.

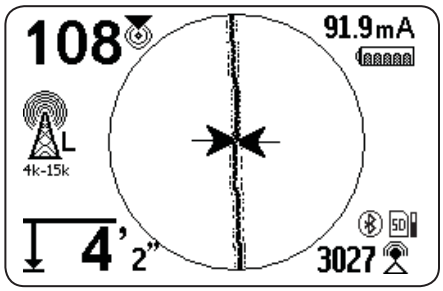

The Guidance Line gets longer as the receiver aligns with the direction of the target line. For best guidance accuracy, align the Tracing Line and Guidance Line between the Guidance Arrows. As a general rule, if there is a moderate mismatch between the Tracing Line and Guidance Line, the Guidance Line will be closer to the actual utility position. Any mismatch is an indication of distortion.

Distortion

Electromagnetic receivers like the SR-24 require a signal directly from the target utility without modification by environmental factors to obtain optimal accuracy. Environmental factors can include the presence of nearby metallic conductors or the addition of electromagnetic fields from other sources like fields radiating from adjacent utilities. These factors may distort the shape of the field received by the SR-24 and are experienced by the SR-24 as distortion. The SR-24 uses its Omnidirectional antennas and gradient antennas to measure distortion and provide audio and on-screen indicators.

Nearby metallic conductors can distort the shape of the target line's electromagnetic field. The SR-24 gives three different indicators to alert you that distortion is present.

Take extra precautions when distortion is present to confirm the accuracy of the locate.

Note: Refer to the Improving and Confirming Accuracy section for information on improving the locate.

The Tracing Line Distortion Response activates when distortion is detected. The Tracing Line Distortion Response makes the Tracing Line appear fuzzy when distortion is present. The fuzzier and more spread out the Tracing Line is, the greater the distortion.

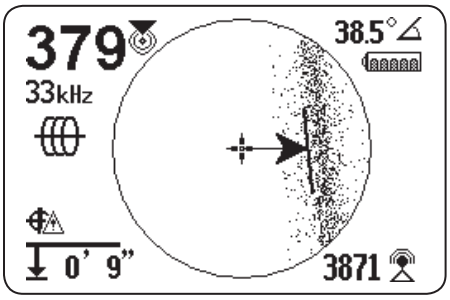

You can set the Tracing Line Distortion Response to high "H," medium "M," low "L" (default), or "OFF." Set the Tracing Line Distortion Response to high to increase its sensitivity to distortion.

Note: To change the Tracing Line Distortion Response sensitivity settings, refer to the Customizing Display Elements section.

When the Distortion Line is enabled, the tracing line fuzziness is turned off. The Tracing Line becomes a solid line and the Distortion Line (dashed line) appears when distortion is present. The dashed Distortion Line represents the signal detected by the Upper Antenna and the solid Tracing Line represents the signal detected by the Lower Antenna.

Distortion is likely if the Distortion Line does not align with the Tracing Line. The Distortion Line and the Tracing Line may move randomly if the SR-24 receives a weak signal.

Active Line Tracing

In Active Line Tracing Mode, the SR-24 detects signals generated by a line transmitter, such as the RIDGID SeekTech ST-33Q+. Transmitters can energize a target line with a tracing signal in three ways: Direct Connect (metal-to-metal contact), with an Inductive Clamp, or using the transmitter's internal transmitting antenna through Induction.

Note: For complete instructions on generating a locating signal with a transmitter, refer to the operator's manual that came with the line transmitter you are using.

Direct Connect

Energizing a target line by direct connection requires metal-to-metal contact.

1. Use the clip's built-in scraper to remove paint, dirt, or debris from the connection point to ensure good metal-to-metal contact.
2. Attach one of the transmitter's lead clips to the target line.

3. Push the grounding stake into the ground as far as possible and attach the transmitter's other lead clip to it.

With the transmitter's lead clips attached to the target line and the grounding stake, a circuit is created for the signal to travel. The circuit allows current to flow, energizing the target line.

Note: A weak ground connection can cause a poor tracing circuit. Refer to the Improving the Tracing Circuit section for more information on grounding.

4. Begin tracing the line.

Note: Refer to Tracing the Target Line section for instructions on how to trace the target line.

Inductive Clamp

To use the Inductive Clamp, connect it to the transmitter and close the clamp around the exposed pipe. The transmitter energizes the clamp and induces a current onto the target line. The clamp must be fully closed for it to operate properly.

Induction

To induce a signal onto the target line, place the transmitter over and in line with the target line. The transmitter must be oriented with respect to the line, as shown below, to operate properly (orientation is specific to the transmitter model).

The transmitter's internal transmitting antenna generates a signal that energizes correctly oriented, nearby metallic objects.

To improve the circuit, ensure that both ends of the target line are grounded and place the transmitter away from other metallic conductors that may be nearby.

Note: For complete instructions on generating a locating signal with a transmitter, please consult the operator's manual for your line transmitter.

Induction and Air-Coupling

⚠ WARNING

Air-coupling can lead to false locates.

With Induction, the transmitter broadcasts a signal in all directions. If the receiver is too near to the transmitter, the signal broadcast through the air will be stronger than the signal from the target line underground. This is called air-coupling and it can prevent you from getting an accurate locate.

The impact of air-coupling varies with each locate and can occur at ranges greater than 20 m [70 ft] if the utility is deep or poorly grounded. Very weak inductive coupling and deep utilities result in greater air-coupling ranges. Always confirm the detection of utilities and the depth measurement readings by testing for air-coupling. Read the following sections for instructions on how to test for air-coupling.

Testing for Air-Coupling

When the receiver is severely air coupled it will warn you by hiding the Tracing Line and Guidance Arrows. Even if you see these displayed, the receiver may still be displaying results corrupted by air-coupling. There are two ways you can test for air-coupling: the 45° tilt test and the depth verification test.

To perform the 45° tilt test, follow these steps:

1. With the SR-24 aligned with the target line, touch the Lower Antenna to the ground and tilt the SR-24 at a 45° angle toward the transmitter.
2. Note the depth.
3. With the Lower Antenna still touching the ground, tilt the SR-24 away from the transmitter at a 45° angle.
4. Note the depth.

If the tilted depth reading changes significantly comparing the two cases, air-coupling is occurring.

Note: The depth reading will not be an accurate reading of the target line's depth.

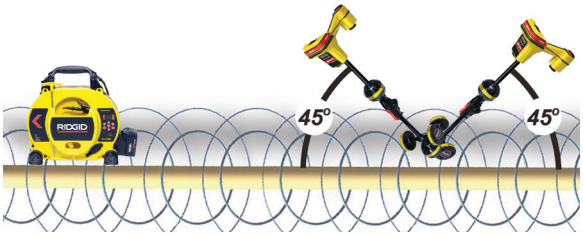

To perform the depth verification test, follow these steps:

1. Stand at least 6 m [20 ft] away from the transmitter.
2. With the SR-24 aligned with the target line, touch the Lower Antenna to the ground and note the depth.
3. Raise the SR-24 vertically at a known distance, for example 150 mm [6 in], and observe changes in the depth.

   Note: Although depth measurements are rarely perfectly accurate, the depth should increase approximately by the known distance (in this example, 150 mm [6 in]), if the SR-24 is only detecting the electromagnetic field of the target line.
4. If the depth reading does not change by the distance raised, air-coupling is occurring. Move further from the transmitter and test again.

Tracing the Target Line

To trace the target line using Active Line Trace Mode, follow these steps:

1. Set the transmitter to Direct Connect Mode, Inductive Clamp Mode, or Inductive Mode.

   Note: SeekTech transmitters automatically switch to Inductive Clamp Mode when a SeekTech clamp is plugged in.
2. Set the transmitter's frequency and press the Frequency Key on the SR-24 to set the receiver to the same frequency.

   Note: Make sure you have selected an Active Line Trace frequency and not a Sonde frequency. Refer to the Setting the Frequency section for instructions on how to set the frequency.
3. Make sure the SR-24 is detecting the transmitter's signal. Position the receiver approximately 1 m [3 ft] from one of the transmitter's leads and observe the Signal Strength reading. If the locating circuit is good, the Signal Strength reading will be strong and steady, with minimal fluctuation.
4. Center the Tracing Line to get an initial location of the utility. Orient the Tracing Line and the SR-24 to correctly utilize the Guidance Arrows.
5. In the absence of signal distortion, balance the Guidance Arrows, orient the Guidance Line, and maximize the Proximity Number and Signal Strength to pinpoint the location of the target line.

Be aware that minor disagreements between the various location indicators are normal and represent small differences between the measured signal and the theoretical, ideal signal.

Large discrepancies may indicate a problem with the signal and must be resolved before the location of the target line may confidently be determined.

Confirming Accuracy

To confirm the accuracy of a locate, check that all of the following are true:

- The Guidance Arrows and Guidance Line are aligned with the Tracing Line.
- The Tracing Line shows little or no distortion.
- The Proximity Number and Signal Strength maximize when the Tracing Line crosses the map center.
- The measured depth increases appropriately and the Tracing Line remains aligned when the Depth Verification Test is performed.

Refer to the SR-20 Instructional Video for a demonstration of how to confirm accuracy of the locate and make your locates accurate and efficient. The video is on a DVD included with the SR-24 manual pack or can be viewed online:

www.RIDGID.com/us/en/instructional-videos

Passive Line Tracing

⚠ CAUTION

Due to the nature of Passive Line Tracing, measured depth may not be accurate. Whenever possible, perform an Active Line Trace to confirm your Passive Line Trace results.

Passive Line Tracing involves tracing signal energy from nearby sources such as AC power lines, radio and TV broadcasting signals, and electrical devices that have been coupled onto buried utilities. Passive Line Tracing does not require a transmitter.

The SR-24 has two types of Passive Line Tracing frequencies: Power Frequencies and Radio Frequencies, which includes OmniSeek®.

OmniSeek is a SeekTech exclusive frequency setting that searches power and radio frequencies simultaneously. By default, all Passive Line Tracing frequencies are active ☑ in the Main Menu.

Keep the following in mind when performing a Passive Line Trace:

- Use the best frequency range or band for the target line type.
- Use an orderly and thorough search pattern to cover the area of interest.
- Use the on screen display elements and audio cues just as you would when performing an Active Line Trace.

Note: Refer to the Setting the Frequency section for instructions on how to set the different frequencies.

Passive Power

Power Frequencies are used to locate signals from AC power lines. In addition to 50 Hz and 60 Hz power frequencies, the SR-24 also has an exclusive broadband power frequency range that covers all frequencies below 4 kHz.

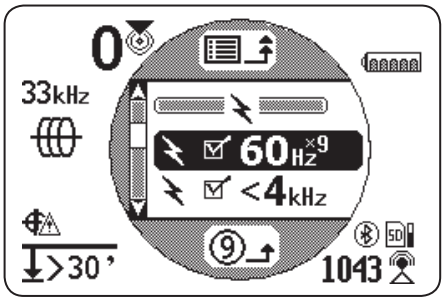

Passive Radio Frequency Broadband

The SR-24 has two Radio Frequency ranges (Low and High) as well as the SeekTech exclusive feature, OmniSeek ∞, which searches three passive frequency bandwidths simultaneously.

- Low L 4k-15k 4 kHz – 15 kHz
- High H >15k 15 kHz – 35 kHz
- OmniSeek ∞
  - < 4 kHz
  - 4 kHz – 15 kHz
  - > 15 kHz

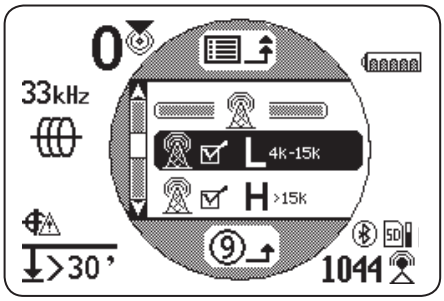

With a broadband signal type, the SR-24 displays positional information for the strongest source in the given frequency range.

OmniSeek

OmniSeek passively traces the line by simultaneously searching through the following three frequency bands:

- Less than 4 kHz
- From 4 kHz to 15 kHz
- Greater than 15 kHz

When OmniSeek is enabled, the SR-24 searches for signal energy in all three broadband ranges simultaneously and displays a Tracing Line for each range that has a usable signal.

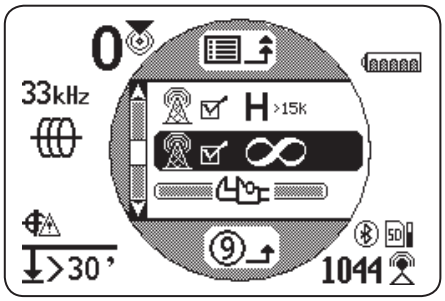

The signal that is closest to the receiver is the primary signal and its frequency range is displayed above the OmniSeek icon on the screen. The bold Tracing Line and other display readings will reflect its characteristics.

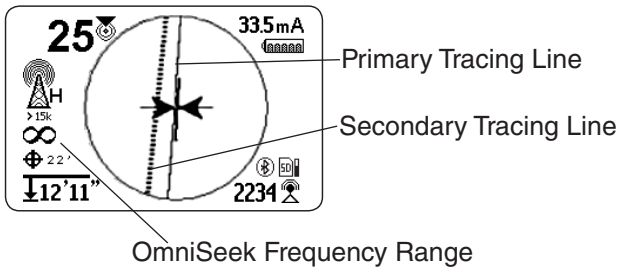

If the SR-24 detects signals in the other two frequency ranges, it displays dashed Tracing Lines to indicate the estimated position of these secondary signals. If the receiver is moved, focus automatically shifts to the closest signal.

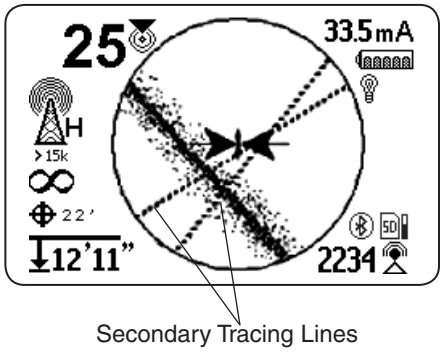

Secondary Tracing Lines make it easier to detect the presence of multiple utilities. If one or two Secondary Tracing Lines appear out of alignment with the Tracing Line, there may be another utility in the area. Secondary Tracing Lines that are out of alignment could also indicate the presence of signal energy on the same utility in different frequency bandwidths.

Confirming Accuracy

To confirm the accuracy of a locate, check that all of the following are true:

- The Guidance Arrows and Guidance Line are aligned with the Tracing Line.
- The Tracing Line shows little or no distortion.
- The Proximity Number and Signal Strength maximize when the Tracing Line crosses the map center.
- The measured depth increases appropriately and the Tracing Line remains aligned when the Depth Verification Test is performed.

Refer to the SR-20 Instructional Video for a demonstration of how to confirm accuracy of the locate and make your locates accurate and efficient. The video is on a DVD included with the SR-24 manual pack or can be viewed online:

www.RIDGID.com/us/en/instructional-videos

Sonde Locating

Sondes come in different shapes and sizes and are often used to locate non-conductive pipes and conduits. Some can be floated down a line and others can be attached to the end of a metal or fiberglass push cable. Most SeeSnake® camera reels have a Sonde installed inside or just behind the camera head on the push cable.

The SR-24 can locate the signal of a Sonde within a pipe, allowing you to pinpoint the Sonde's position and depth underground.

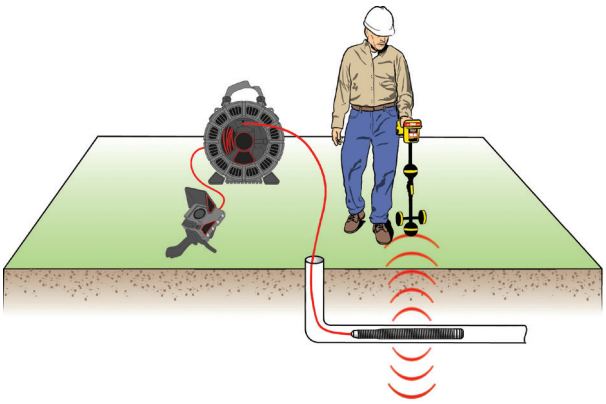

How the Sonde Works

When the Sonde is activated, a dipole field similar to the dipole field around the Earth forms around the Sonde. The SR-24 detects the Sonde's dipole field and uses the field information to help the user locate the Sonde's position and depth.

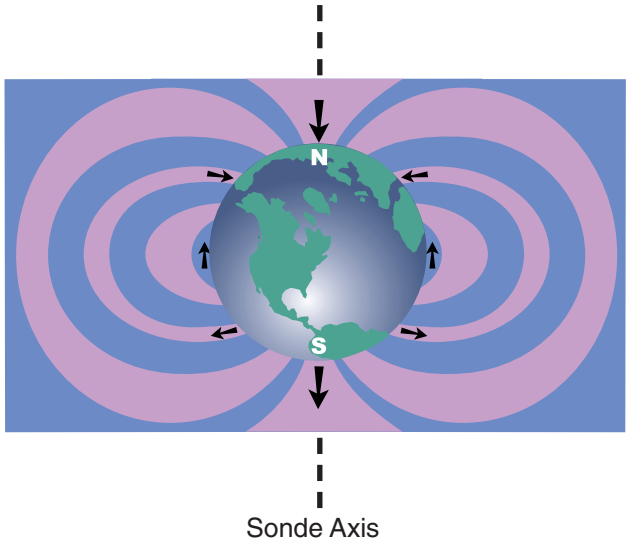

Locating the Sonde

The primary means of locating the Sonde is by finding the point where its signal is strongest. The SR-24 also has graphical icons that can be used to help find the Sonde and map its position. Using the receiver's graphical locating features can often speed up the locate and reveal additional information about the Sonde's position in the line.

To locate the Sonde, follow these steps:

1. Activate the Sonde and press the Frequency Key on the SR-24 to set it to the matching Sonde frequency.

   Note: Make sure you have selected a Sonde frequency and not a Line Trace frequency.

2. Before putting the Sonde into the line, verify that it is functioning properly and that the SR-24's Signal Strength is registering a strong, steady signal.

3. Push the Sonde no more than 5 m [15 ft] into the pipe.

   You must be within range of the Sonde's signal to locate it. The range varies depending on the Sonde, pipe material, depth, and soil composition.

4. To find the Sonde's general direction, point the SR-24's mast in the suspected direction of the Sonde and sweep the horizon in a slow arc. The Signal Strength is highest when the Lower Antenna is closest to the Sonde and drops off when pointed away in any other direction. The SR-24's sound may be useful to find the highest Signal Strength.

5. Once you've detected the general direction of the Sonde, lower the SR-24 to its vertical operating position and walk toward the Sonde. The Signal Strength and audio tone increases as you move toward the Sonde and decreases as you pass its position.

6. Continue searching for the highest signal by moving the receiver left, right, forward and backward until you have located the point where the signal is strongest and mark the Sonde's position at this point.

Using the SR-24's Mapping Feature

The SR-24's mapping feature provides a fast, intuitive way to find the Sonde's position underground. The Sonde's dipole field is similar to the Earth's magnetic field, with two Poles and an Equator. The SR-24 uses icons to represent the position of the two Poles and the Equator. Finding and marking the Poles and Equator can give you a better picture of the Sonde's position underground.

To map the location of the Sonde, follow these steps:

1. Follow steps 1 through 6 in the previous section.
2. Locate the first Pole.

   As you approach the Sonde, either a Pole icon or the Equator Line appears inside the Active View Area. If you see the Equator Line first, move to the left or the right until a Pole icon appears.
3. Center the Pole icon in the Cross Hairs and mark its position with a red marker chip.

Note: The Pole's location is most accurate when the Lower Antenna is touching the ground and the receiver's antenna mast is held vertical.

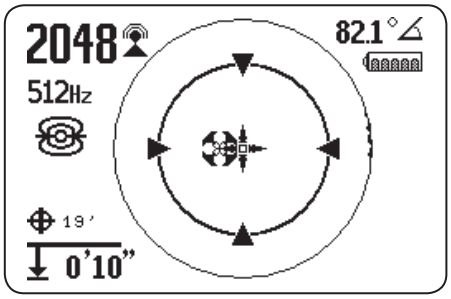

4. Locate the second Pole.

   Move the receiver a few inches off the Pole until the Pipe Direction appears. Two Sonde Equator icons appear along the Equator Line once the first Pole has been located, to indicate the Sonde's location is near.

   Walk along the pipe in that direction. The second Pole appears after you cross the Equator. Mark the location of the second Pole with a red marker chip.
5. Locate the Sonde.

   Move back toward the Equator. Align the receiver between the two Poles, center the Equator on the Cross Hairs, and mark the Sonde's estimated location with a yellow marker chip.

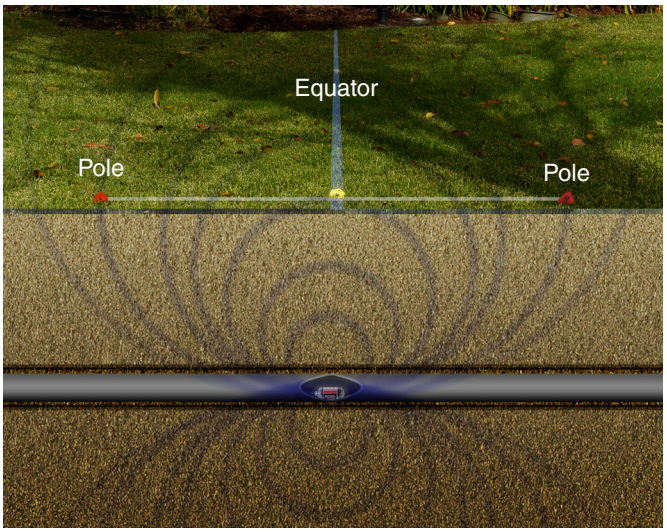

6. To verify you have located the Sonde, make sure the Signal Strength drops when you move the receiver in any direction.

   Note: Always verify your result by locating the point where the Signal Strength is highest and marking the Sonde at this location. If the sonde is horizontal and not tilted, the equator will be at the point of maximum signal strength.

Floating Sondes

Sondes that are designed to be flushed or floated down a pipe move freely and can orient any direction inside a pipe. As a result, it may not be possible to accurately pinpoint the Sonde by mapping the Poles and Equator. To locate floating Sondes, find the point where the Signal Strength is highest.

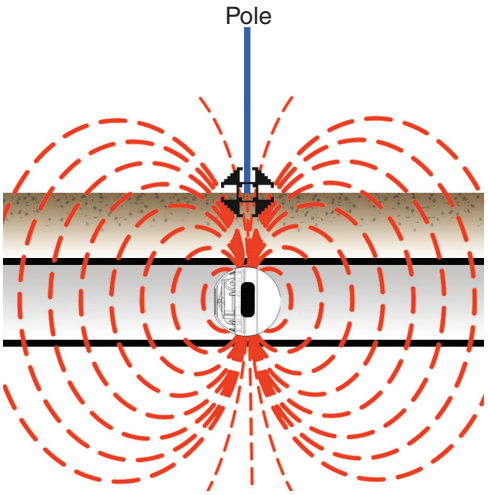

The RIDGID NaviTrack FloatSonde floats with the Pole pointing straight up. Some other floating Sondes float with the Sonde axis in line with the pipe. To locate a Sonde in a vertical orientation, center the Pole icon in the Active View Area. For vertical Sondes, only one pole is found above ground.

Tilted Sondes

A Sonde is tilted when it is not parallel to the ground above. This often happens when a Sonde is positioned in a portion of pipe that is not horizontal. Mapping the position of the Poles and Equator can help you determine that a Sonde is tilted.

When a Sonde is tilted, the Equator will not be centered between the two Poles. When a Sonde is severely tilted, in a vertical portion of pipe, for example, the Equator may not center over the Sonde and the point of maximum Signal Strength may occur over a Pole. To locate tilted Sondes, find the point where the Signal Strength is highest.

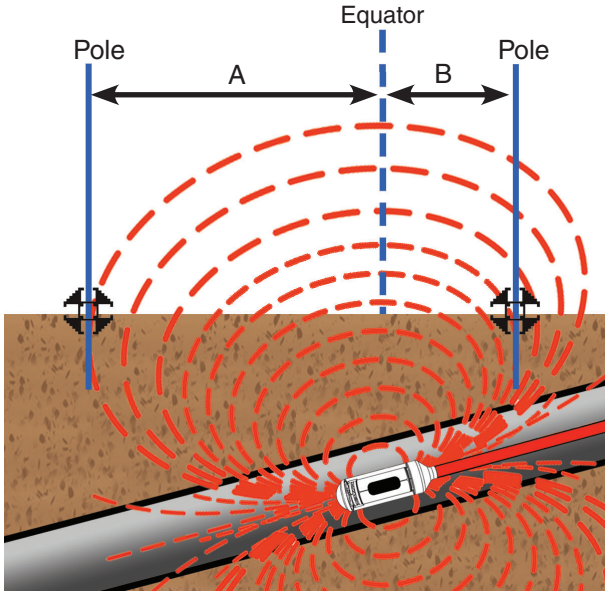

Depth

⚠ CAUTION

For the depth to display correctly, the mode must be set correctly. Sonde frequencies and Line Trace frequencies can sometimes be the same. Make sure the mode icon next to the frequency that you are using, is the mode you intend to be locating with.

The SR-24 calculates measured depth by comparing the difference in Signal Strength between the Upper Antenna and the Lower Antenna. The measured depth indicator is displayed in the lower left corner of the screen in either meters or feet.

Note: Refer to the Units of Measurement section for instructions on how to change the depth units.

Depth Verification Test

To verify the SR-24 is correctly measuring the target line's depth, follow these steps:

1. Touch the Lower Antenna to the ground directly above the Sonde or the target line.
2. Vertically orient the antenna mast and note the depth.
3. Raise the SR-24 off the ground approximately 150 mm [6 in].
4. Observe the change in measured depth. The measured depth should increase by approximately the same amount (in this example, approximately 150 mm [6 in]).

Note: An unchanging or drastically changing measured depth may indicate the presence of a distorted field or a line with very low current.

NOTICE **Use measured depths as estimates only. Independently verify actual depths before excavating.**

Depth Average

In addition to real-time depth measurement, the Depth Average feature is useful when the SR-24 has variable depth readings.

The Depth Average is a report that averages real-time depth readings from the past 2 to 6 seconds and displays the average on screen inside the Active View Area when prompted.

To create a Depth Average Report, follow these steps:

1. Press and hold the Select Key.
2. Wait for the countdown screen to go out of view and for the SR-24 to beep once.
3. The Depth Average Report shows the measured depth, angle, and current of the target line.
4. Press the Select Key to exit and return to the real-time depth reading.

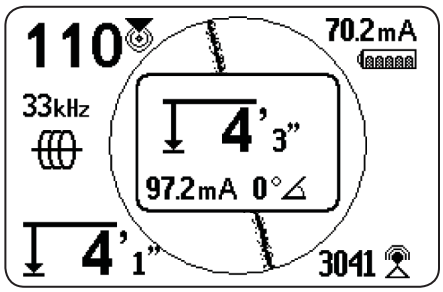

Depth Alerts

Under normal operating conditions, using Depth Average can improve the accuracy of the locate by displaying averaged data. However, conditions such as distortion, noisy environments, and clipping may affect accuracy.

A Depth Alert appears if conditions with the potential to affect accuracy are encountered.

SR-24 Depth Alerts	
Image	**Condition**
	Excessive motion during sampling
	Depth varying significantly
	Signal strength varying significantly
	Extreme offset between Guidance Line (right or left) and Tracing Line
	Clipping (signal too high)
	Too much distortion

Improving and Confirming Accuracy

⚠ DANGER

Exposing the utility is the only way to be certain of its location. If excavating a utility, periodically recheck the measured depth and position to avoid damaging the utility and to identify additional utility signals that may have been overlooked.

Factors Affecting Accuracy

The following conditions can affect the accuracy of a locate:

- **Distortion due to local interference or poor signal strength.** Distortion is caused by the impact of nearby fields, nearby conductors, magnetic flux, or other interference on the circular electromagnetic field. Distortion is detected by comparing the information from the Tracing Line, Proximity Number, Signal Strength, measured depth, Signal Angle readings, and Upper Antenna measurements.
- **Bleed over from the presence of other cables or utilities.** Bleed over happens when the signal from the transmitter couples onto nearby non-target lines. The SR-24 can receive the same frequency on multiple non-target lines. Bleed over can distort fields and illuminate unwanted utility lines. If possible, use lower frequencies and eliminate connections between other utilities.
- **The presence of tees, turns, or splits in the line.** Turns or tees can cause a sudden increase in the Tracing Line Distortion Response. If following a signal that suddenly becomes distorted, circle the last location of a clear signal at a distance of approximately 6 m [20 ft]. Find the line nearby, to determine whether or not the distortion is coming from a local turn or tee in the line.
- **Varying soil conditions.** Very wet or very dry soil can affect signal coupling. Saturating the soil with very salty water may strengthen the circuit. Very dry soil may weaken the circuit, if grounding is reduced.
- **The presence of large, metal objects.** The presence of large, metal objects can cause unexpected increases or decreases in Signal Strength. This type of distortion appears stronger at higher frequencies.
- **Low Signal Strength.** If the signal is low, attempt to improve the signal as specified in the following section.

Signal Strength

If the Tracing Line cannot be centered or if it moves across the screen erratically, the SR-24 may not be receiving a clear signal, stable measured depth, or a reliable Proximity Number.

To attempt to improve the signal, do at least one of the following:

- Check the transmitter and make sure that it is well grounded.
- Check the tracing circuit's Signal Strength by pointing the Lower Antenna at one of the transmitter leads. Improve the circuit if a weak signal is shown.
- Check that the SR-24 and the transmitter are operating on the same frequency.
- Switch to a higher frequency to overcome resistance and to induce more current onto the line.
- Switch to a lower frequency to reduce bleed over.

Clipping

Clipping occurs when the receiver cannot properly process the signal because the Signal Strength is too large. Clipping occurs most often close to powerful sondes and high current power lines. When clipping occurs, the SR-24 displays a warning symbol on the screen.

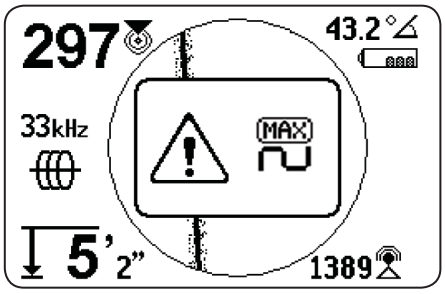

The SR-24 responds to clipping by attenuating the measurement. Attenuation reduces the intensity of the Signal Strength so the SR-24 can measure it. If the SR-24 is still experiencing clipping, increase the distance between the SR-24 and the target line.

No Signal Icon

You can enable the No Signal icon to display when there is no meaningful signal. The No Signal icon gives a fast and easy notification that no signal is detected.

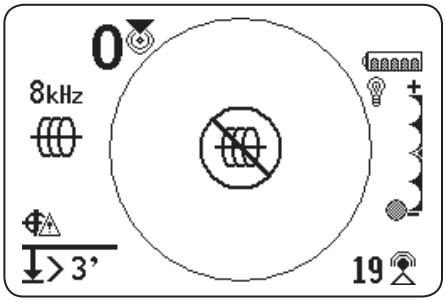

Note: The No Signal icon is disabled by default. Refer to the Customizing Display Elements section for instructions on how to enable the No Signal icon.

If the No Signal icon appears, try the following to attempt to gain a signal:

- Change the grounding
- Change the frequency
- Use induction
- Move the transmitter

Center Signal Strength

Select the Center Signal Strength option to display the Signal Strength in the center of the screen. The Center Signal Strength option makes the Signal Strength easier to see when locating using Signal Strength alone.

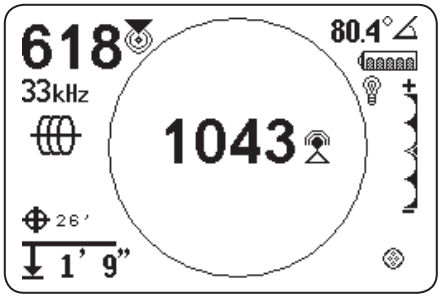

Note: The Center Signal Strength option is disabled by default. Refer to the Customizing Display Elements section for instructions on how to enable the Center Signal Strength option.

Signal Focus Control

Signal Focus Control acts as a magnifying glass on the signal. It narrows the sample bandwidth and displays more stable incoming signals, allowing the SR-24 to focus on a particular signal with increased detail.

Note: The selection of a narrow bandwidth increases the detection distance and precision, but slows the refresh rate of the display. As a result, when using the narrowest setting, move the SR-24 along the line more slowly.

The Signal Focus Control is disabled by default and must be enabled in the Display Settings screen to make any adjustments to it.

When the Signal Focus Control is activated, from the Active View Area, use the Up and Down Arrow Keys to set it to one of the following bandwidths:

- 4 Hz, wide (default setting when the Signal Focus Control is disabled)
- 2 Hz
- 1 Hz
- 0.5 Hz
- 0.25 Hz, narrow

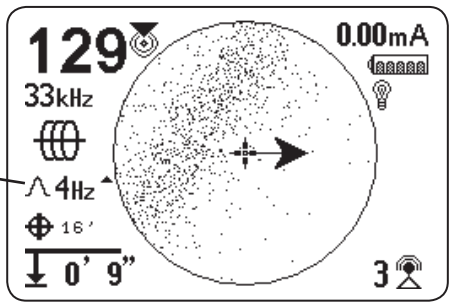

Note: The Signal Focus Control option is disabled by default. Refer to the Customizing Display Elements section for instructions on how to enable the Signal Focus Control option.

Tracing Circuit

A weak signal can often be improved by changing the tracing circuit. To improve the circuit, perform one or more of the following:

- Wet the soil around the ground stake.
- Move the ground stake away from the target line.
- Use a larger ground, such as a shovel blade.
- Ensure that the target line is not commonly bonded to a utility. If bonded, undo the common bond, only if it is safe to do so. Reconnect bonds, when locate is complete.
- Change the frequency.
- Move the transmitter.
- Locate from the other direction along the line.

Confirming Accuracy

To confirm the accuracy of a locate, check that all of the following are true:

- The Guidance Arrows and Guidance Line are aligned with the Tracing Line.
- The Tracing Line shows little or no distortion.
- The Proximity Number and Signal Strength maximize when the Tracing Line crosses the map center.
- The measured depth increases appropriately and the Tracing Line remains aligned when the Depth Verification Test is performed.

Refer to the SR-20 Instructional Video for a demonstration of how to confirm accuracy of the locate and make your locates accurate and efficient. The video is on a DVD included with the SR-24 manual pack or can be viewed online:

www.RIDGID.com/us/en/instructional-videos

Current Measurement (mA) and Signal Angle

The values displayed on the screen for Current Measurement (mA) and Signal Angle are indicators you can use to verify the accuracy of a locate. When the Current Measurement (mA) is displayed and the Guidance Arrows and Tracing Line are aligned, you can be more confident your locate is accurate.

The SR-24 detects the Current Measurement (mA) of the target line and displays it in the upper right corner of the screen. The Current Measurement (mA) is only displayed when the SR-24 is directly over the target line. When the SR-24 is not over the target line, the target line's Signal Angle displays instead of the Current Measurement (mA).

Main Menu

Below is a map of the top level Main Menu. The contents of the expanded Settings menu appear in the next section of this manual.

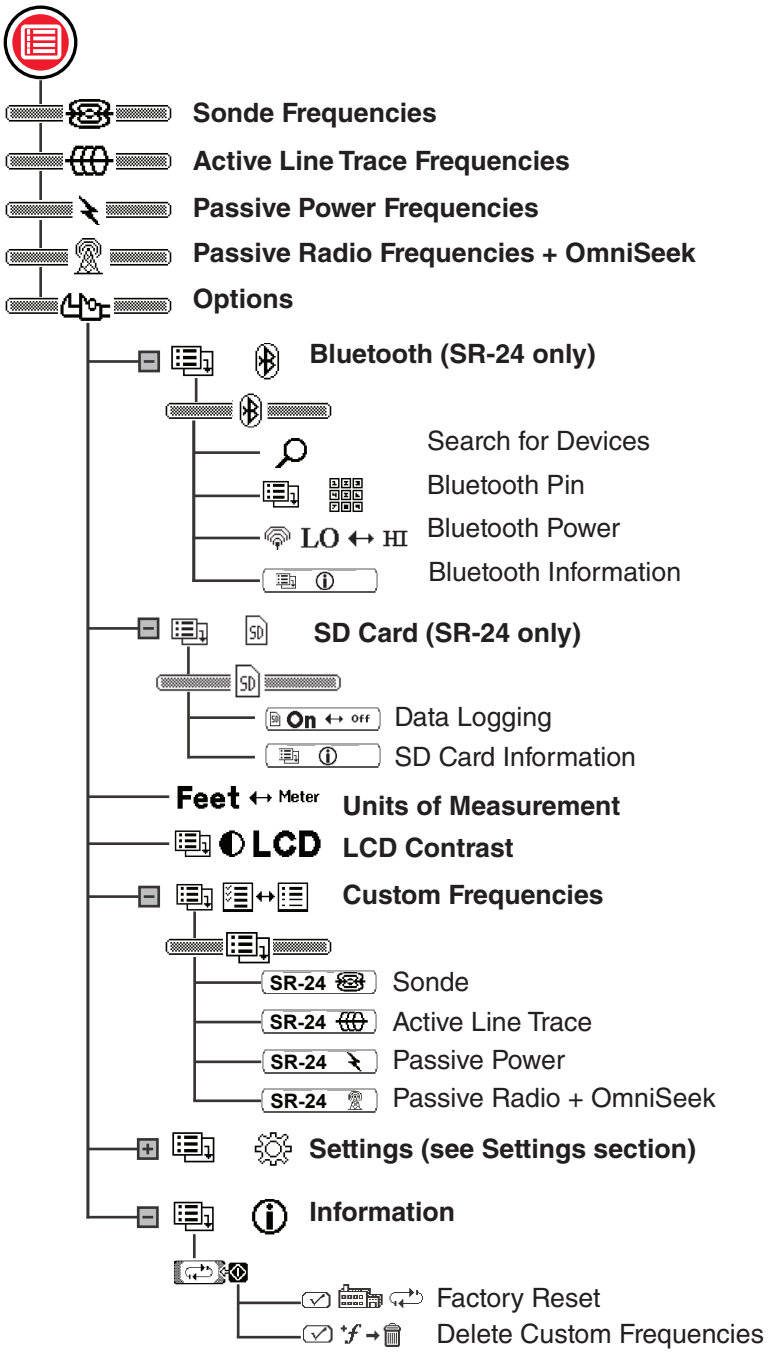

Setting the Frequency

The instructions for selecting frequencies and activating inactive frequencies from the Main Menu are the same for Active Line Trace, Passive Power, Passive Radio Frequency Broadband, OmniSeek, and Sonde frequencies.

Selecting Active Frequencies

There are three ways to change the frequency:

- Press the Frequency Key one or more times to cycle through the list of active frequencies.
- Press and hold the Frequency Key to open the Frequency Selection menu.
- Press the Menu Key, highlight the frequency, and press the Frequency Key.

To change the Active Frequency through the Frequency Selection menu, follow these steps:

1. Press and hold the Frequency Key for half a second to display a list of active frequencies.
2. Use the Up and Down Arrow Keys to highlight the desired frequency.
3. Press the Select Key to set the highlighted frequency and return to active view.

Activating Inactive Frequencies

Inactive frequencies are preprogrammed frequencies that can be activated for specific uses. Inactive frequencies appear in the Main Menu with the box next to the number unchecked.

When frequencies are activated they are added to the Frequency Selection menu and appear in the Main Menu with the box next to the number checked. Activate your favorite frequencies to make frequency selection fast and easy.

To activate inactive frequencies, follow these steps:

1. Press the Menu Key to see the complete list of available frequencies.
2. Use the Up and Down Arrow Keys to highlight the desired inactive frequency.
3. Press the Select Key to check the box next to the highlighted frequency 33kHz.

   To deactivate frequencies, uncheck the box next to the frequency by pressing the Select Key.
4. Press the Menu Key to save and exit.

Bluetooth

The following section applies to the SR-24 only.

The SR-24 is compatible with Bluetooth 2.0 devices that use the RFCOMM profile, including many smart phones, tablets, and GPS units. Refer to www.RIDGID.com/SR24 for a list of some models that have been tested to work with the SR-24.

You can connect the SR-24 to compatible Bluetooth devices and configure connection options from the Bluetooth Options menu.

Bluetooth Connection Method

To use Bluetooth you must connect the SR-24 and your Bluetooth device. To initiate connection from your Bluetooth device, follow these steps:

1. Enable Bluetooth on your Bluetooth device.
2. Open the Bluetooth list and select the SR-24 from the list. After connecting, the SR-24 briefly displays the following image on screen.

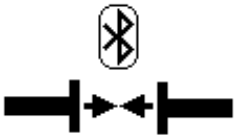

3. Make sure the status of the SR-24 on your device's Bluetooth list appears as connected. The SR-24 has failed to connect when the image below displays on the SR-24's screen. The image displays until the Menu Key or the Select Key is pressed.

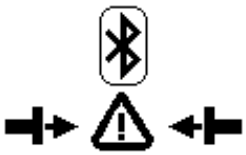

Note: If there is a Bluetooth device present and the SR-24 has failed to connect, repeat step 2.

4. Once connected, confirm the Bluetooth icon appears in the bottom right of the SR-24's screen.

Alternate Bluetooth Connection Method

Note: It is usually most convenient to initiate the Bluetooth connection to the SR-24 from the Bluetooth device.

If you are unable to initiate the connection from your Bluetooth device try the alternate method from the SR-24. To initiate the Bluetooth connection from the SR-24's Main Menu, follow these steps:

1. Make sure your Bluetooth device is enabled and discoverable.

   Note: The Bluetooth device must be discoverable for the SR-24 to find it.

2. Press the SR-24's Menu Key to open the Main Menu.
3. Use the Down Arrow Key to highlight the Bluetooth Options icon and press the Select Key to open the Bluetooth Options menu.
4. Highlight the Search icon and press the Select Key to search for Bluetooth devices.

   Note: If there is a Bluetooth device present and the SR-24 has failed to find the Bluetooth device, make sure the Bluetooth device is discoverable.

5. Use the Down Arrow Key to highlight the device you want to connect to.

   Note: New Bluetooth devices appear below the previously paired devices in the Bluetooth Options menu.

6. Press the Select Key to connect the SR-24 to the Bluetooth device.

Confirming Bluetooth Connection

During operation, confirm your Bluetooth device is connected to the SR-24 by observing the Bluetooth icon in the bottom right of the screen.

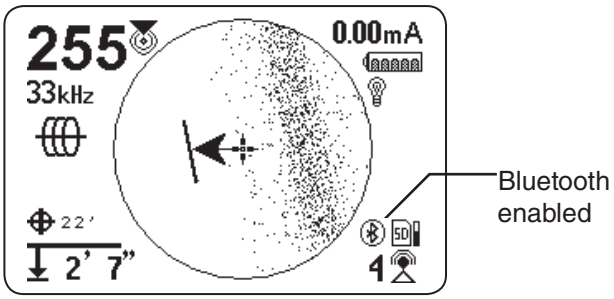

Disconnecting Bluetooth

There are two ways to disconnect the SR-24 and your Bluetooth device. Disconnect Bluetooth from your Bluetooth device or from the SR-24's Main Menu.

Note: Refer to your Bluetooth device for information on how to disconnect a Bluetooth connection from your Bluetooth device.

To disconnect the SR-24 and your Bluetooth device from the SR-24's Main Menu, follow these steps:

1. Press the Menu Key to open the Main Menu.
2. Use the Down Arrow Key to highlight the Bluetooth Options icon and press the Select Key to open the Bluetooth Options menu.
3. Highlight the Disconnect icon and press the Select Key to disconnect the SR-24 and your Bluetooth device. When disconnected, the Disconnect icon will change back to the Search icon .
4. Press the Menu Key to exit.

Note: To make changes to the Pin, Bluetooth Power, or to view the Bluetooth Information screen, you must first disconnect the Bluetooth.

Bluetooth Pin

Some Bluetooth devices require a pin to connect to the SR-24. If a pin is necessary, enter the SR-24's pin into your Bluetooth device.

The default pin is 1234.

If desired, you can change the SR-24's Bluetooth pin on the SR-24. To change the SR-24's pin, follow these steps:

1. Disconnect the SR-24 and your Bluetooth device.

   Note: Refer to the previous section for instructions on how to disconnect the SR-24 and your Bluetooth device.

2. Highlight the Bluetooth Pin icon in the Bluetooth Options menu and press the Select Key to open the Bluetooth Pin screen.

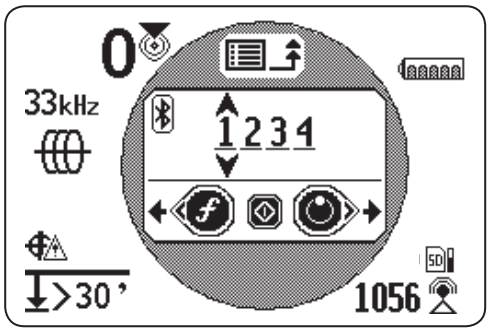

3. Use the Left and Right Arrow Keys to move between digits and use the Up and Down Arrow Keys to increase and decrease the value of the digits.
4. Press the Select Key to save the pin and exit the Bluetooth Pin screen.
5. To abort any changes to the pin, press the Menu Key to return to the Bluetooth Options menu.

Bluetooth Auto-Connect

After connecting for the first time, the SR-24 no longer requires a pin to connect to that Bluetooth device. When the SR-24 is powered on, it automatically searches for any device that has previously connected to. The SR-24 automatically connects if it is within range of a previously connected device and the device is available.

Note: The device does not need to be discoverable to reconnect to the SR-24.

The SR-24 can save up to sixteen Bluetooth devices. When maximum capacity is reached and a new Bluetooth device is added, the SR-24 replaces an old Bluetooth device with the new Bluetooth device in the list below the Search icon in the Bluetooth Options menu.

The SR-24 continues to attempt to auto-connect if you disconnect the Bluetooth connection from your Bluetooth device. To disconnect an automatically connected device from the SR-24 you must do so from the SR-24's Bluetooth menu. Refer to the Disconnecting Bluetooth section for instructions on how to disconnect Bluetooth.

Once you have disconnected an auto-connected device from the SR-24, no further automatic connection attempts will be made for the remainder of that power cycle. When the SR-24 is powered off and then powered on, the Bluetooth reinstates its default setting and attempts to auto-connect to any previously connected device within range.

The SR-24 searches for all previously connected devices within range. The SR-24 connects to the previously connected device that is available. If more than one previously connected device is in range and available, the SR-24 attempts to connect to one, beginning at the top of the list, and going down the list until connected.

If you want to connect to a device that the SR-24 did not automatically connect to, follow these steps:

1. Press the Menu Key to open the Main Menu.
2. Use the Down Arrow Key to highlight the Bluetooth Options icon .
3. Press the Select Key to open the Bluetooth Options menu.

   The name of the previously connected device appears with an asterisk below the Search icon in the Bluetooth Options menu. The following image shows Phone as a device that has previously been connected to the SR-24.

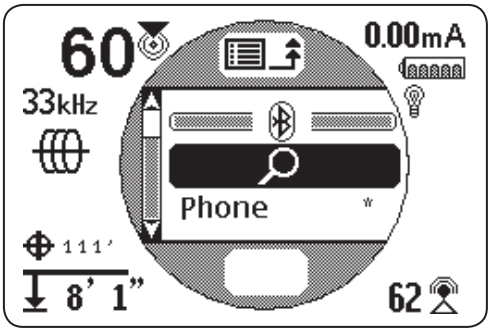

4. Use the Down Arrow Key to highlight the device you want to connect to.
5. Press the Select Key to connect the SR-24 to a specific device that has previously been connected to.

If you are no longer using a Bluetooth device, you can remove it from the list of previously connected devices, follow these steps:

1. Open the list of previously connected devices. Use the Down Arrow Key to highlight the device you want to remove from the list.
2. Press and hold the Select Key for about one second.

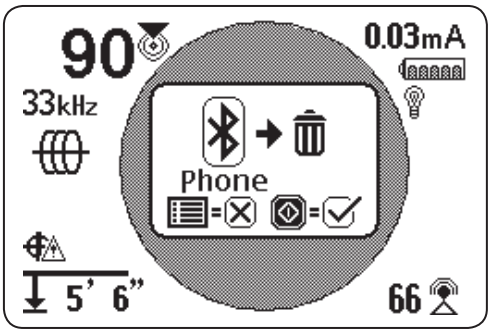

3. Press the Select Key to delete the Bluetooth device from the list of previously connected devices or press the Menu Key to return to the previous screen.

Bluetooth Power Settings

To change the Bluetooth power settings from high (default) to low, you must disconnect the SR-24 and the Bluetooth device. Then use the Down Arrow Key from the Bluetooth Options menu to highlight the Bluetooth Power icon HI ↔ LO. Press the Select Key to toggle between high and low LO ↔ HI. Press the Menu Key to save and exit.

Bluetooth Information

To view the Bluetooth Information screen, follow these steps:

1. Press the Menu Key to open the Main Menu.
2. Use the Down Arrow Key to highlight the Bluetooth Options icon.
3. Press the Select Key to open the Bluetooth Options menu.
4. Highlight the Information icon and press the Select Key.

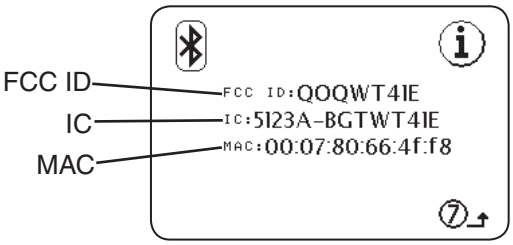

Connecting to a Transmitter with Bluetooth

The following section applies to the SR-24 only.

With Bluetooth enabled, the SR-24 can be used to view and control the transmitter's screen, eliminating the need to walk back and forth between your transmitter and the area being traced. Use the SR-24 to remotely set frequencies, output power, turn the transmitter on and off, or know if the transmitter has turned off unexpectedly.

Range

The ST-33Q+ and SR-24 work best when kept within 200 m [656 ft] of each other while connected by Bluetooth. The quality of the connection between devices may be affected by a number of factors including distance between devices and objects in the path between devices. For the best quality connection, maintain a clear line of sight between devices and set the transmitter so its battery faces the receiver. Objects blocking the line of sight between the transmitter and the receiver may significantly reduce the quality of their connection.

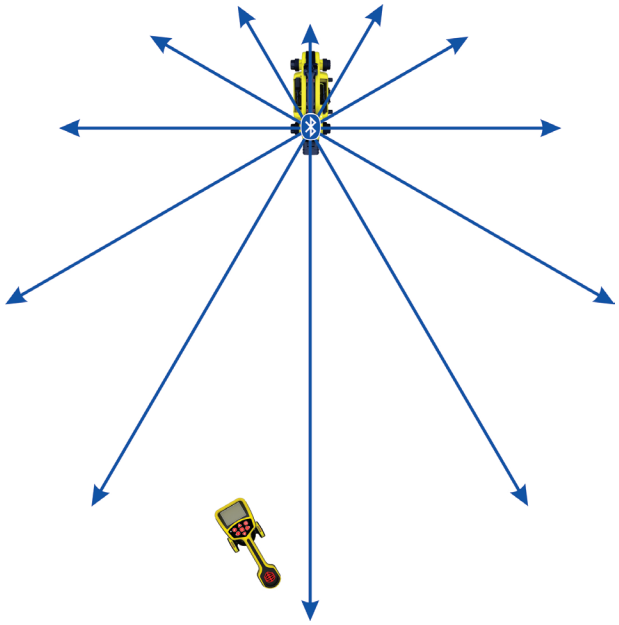

Powering the Transmitter

When the two units are connected with Bluetooth, powering the receiver on or off automatically powers the transmitter on or off.

The receiver alerts you to changes in the transmitter's power status.

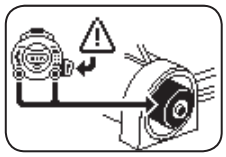	Switching to internal batteries.
	Powered off due to Power Key press.
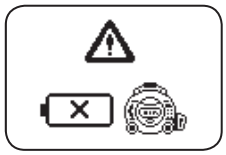	Powered off due to low battery.

Setting the Frequency

Changing the receiver's frequency automatically updates the transmitter's frequency to match. If the frequency is changed on the transmitter, the receiver automatically updates to match as well.

Transmitter Control Screen

The following section applies to the SR-24 only.

When the devices are connected, you can see the transmitter's screen from the receiver. The transmitter control screen allows you to control the transmitter's frequency mode, choose between direct connect or inductive mode, and adjust output power remotely. You can also remotely power the transmitter on or off and know if the transmitter has powered off unexpectedly.

Any changes made on the transmitter to frequency, direct connect or inductive mode, and output power can be seen on the receiver.

To open the transmitter control screen on the receiver, press the Menu Key, then press the Right Arrow Key to toggle in and out of the transmitter's control screen.

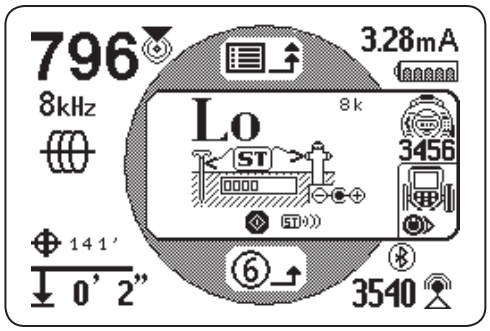

If more than one Bluetooth enabled SeekTech transmitter is present, press the Left Arrow Key to cycle through available transmitters. Press the serial number listed below the transmitter icon to identify the specific transmitter you want to control.

Direct Connect Mode and Inductive Mode

To remotely set the transmitter to direct connect mode or inductive mode using the receiver, open the transmitter control screen. Press the Select Key to toggle between direct connect mode and inductive mode.

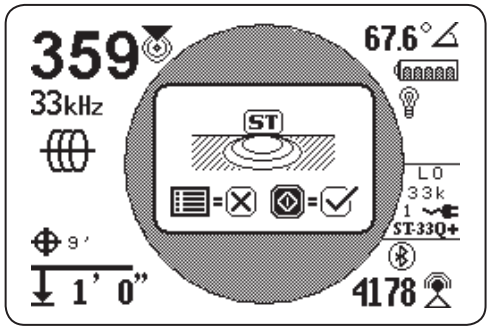

Clamp Mode

The receiver can see the transmitter's clamp mode but cannot turn the transmitter's clamp mode on or off. An inductive clamp must be connected to access clamp mode. Refer to the operator's manual for your transmitter and inductive clamp for more information on using inductive clamp mode.

Output Power

Higher output settings produce a stronger signal for the receiver, but reduces battery life for the transmitter. Only use 1,000 mA High Output Mode if using an 18 V Lithium-ion rechargeable battery, external power, or high capacity NiMH D cell batteries. Do not use the ST-33Q+ in high output mode with standard alkaline batteries.

You can read the transmitter's output power or change it remotely from the receiver. To remotely change the transmitter's output power using the receiver, open the transmitter control screen. Press the receiver's Up and Down Arrow Keys to adjust the output power.

SD Card

The following section applies to the SR-24 only.

The Data Output feature sends the SR-24's locate data to the internal SD card, or to a Bluetooth device if one is available, or to both simultaneously. Full data logging is enabled by default, and you can disable an entire category or specific elements within a category. Refer to Appendix C for descriptions of the data logging elements.

Note: Refer to the Data Output section for instructions on how to disable and enable entire categories or specific elements within a category.

Data can be logged continuously (default), or manually at specific points during a locate, by enabling User-Initiated Data Output. When User Initiated Data Output is enabled, continuous data logging is turned off, resulting in a log file that contains only the information you want.

Data Logging

To disable data logging from the SD Card menu, follow these steps:

1. Press the Menu Key to open the Main Menu.
2. Use the Down Arrow Key to highlight the SD Card icon .
3. Press the Select Key to open the SD Card menu.
4. Highlight the Logging icon On ↔ Off and press the Select Key to toggle between "On" (default) and "Off" Off ↔ On.
5. Press the Menu Key to save and exit.

Note: The SR-24 is compatible with Bluetooth 2.0 devices including many phones, tablets, and GPS units. Refer to www.RIDGID.com/SR24 for a list some models that have been tested to work with the SR-24.

Data Log Files

During continuous streaming (logging is enabled), GPS data is sent once per second and SIG and LCD data is sent twice per second. Data is logged on your Bluetooth device and the internal SD card at the same time.

The internal SD card acts as a USB drive and stores data that can be exported. If logging is enabled for all data, the SD card's capacity fills up at a rate of 3 MB per hour. The included 16 GB SD card will take 5,461 hours to fill capacity.

Note: Ridge Tool Company and its affiliates reserve the right to change the specifications of the hardware, software, or both as described in this manual without notice. Refer to www.RIDGID.com/SR24 for current updates and supplemental information pertaining to this product.

Data logged on the internal SD card is saved in a .txt format file. To export data log files from the SD card, follow these steps:

1. Connect the SR-24 to a computer with a mini-B USB cable.

   Note: The SR-24 does not need to be powered on to transfer files.

2. Open the folder to view files when prompted.

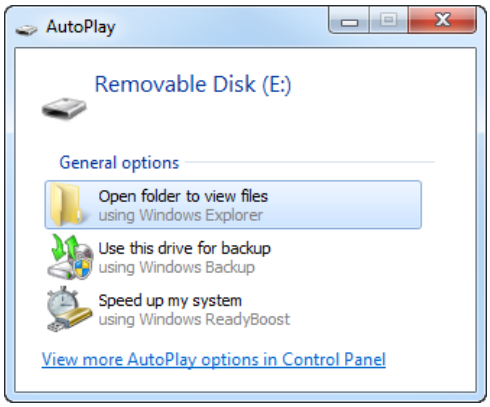

3. There are three folders stored on the SD card. Open the folder named "logs."

   Note: The folders named "bootloader_files" and "gps_binary_logs" are not used during normal operation.

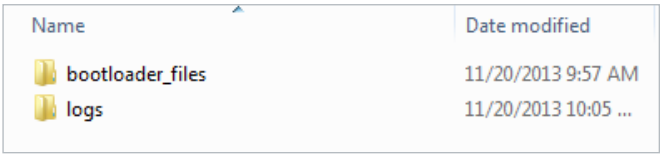

4. Data log files in the “logs” folder are named according to the date and time they were created, for example: sr24_log_yyyymmdd_HHMMSS.txt.

   If data logging is enabled, a new file is created when the SR-24 is powered on. The log file closes when the SR-24 is powered off.

Name	Date modified	Type	Size
sr24_log_20131120_100502.txt	11/20/2013 10:05 ...	Text Document	9 KB
sr24_log_20131120_135022.txt	11/20/2013 1:51 PM	Text Document	62 KB
sr24_log_20131120_141144.txt	11/20/2013 2:11 PM	Text Document	0 KB
sr24_log_20131120_141209.txt	11/20/2013 2:12 PM	Text Document	3 KB
sr24_log_20131120_141326.txt	11/20/2013 2:17 PM	Text Document	186 KB

5. Open the desired data log file. The data log file should automatically open in Notepad or your default text editor. In the data log file, the first line is the header and the lines that follow contain the logged data.

sr24_log_20131204_112105.txt - Notepad

File Edit Format View Help

```
$SEEKT,HEAD,154322,20131203,SR-24,225123456,231,3,1153*90
$SEEKT,SIG,32768,BMAG,57022,BAZ,-55.1,BEL,2.6,TMAG,63198,TAZ,151.4,TEL,10.2,GRAD,-31536,DEPCM,-505.4,DEPIN,-199.0,CUR,0*70
$SEEKT,LCD,DSIG,64,PROX,16,GRAD,-57,FUZ,50,DEP,-1,COA,0,FREQ,32768;1,TRAC,1,BAT,7,LCOR,88;145;151;4;0;515,SYS,-1859,GPSE,5*5a
$SEEKT,SIG,32768,BMAG,48038,BAZ,-12.3,BEL,11.5,TMAG,55226,TAZ,166.1,TEL,18.9,GRAD,12505,DEPCM,-205.8,DEPIN,-81.0,CUR,0*5b
$SEEKT,LCD,DSIG,64,PROX,0,GRAD,-57,FUZ,54,DEP,-1,COA,0,FREQ,32768;1,TRAC,1,BAT,7,LCOR,176;16;87;144;0;515,SYS,-1859,GPSE,5*51
$GPGGA,224322.000,3248.7448,N,11707.1511,W,4,9,1.0,130.4,M,0,M,0,0,5.07*6A
$GPGLL,3248.7448,N,11707.1511,W,224322,A*39
$GPGSA,A,3,3,6,14,18,19,21,22,24,27,,,,0.0,1.0,0.0*32
$GPZDA,224322,03,12,2013,00,00*4F
$GPVTG,346.39,T,0.00,M,0.00,N,0.00,K,A*28
$GPGSV,3,1,12,31,7,117,21,21,67,84,17,18,79,39,33,22,126,7,43*79
$GPGSV,3,2,12,6,78,159,19,19,64,199,44,14,148,134,19,3,67,176,41*4D
$GPGSV,3,3,12,11,10,210,18,24,36,37,29,27,86,168,22,133,98,96,0*76
$SEEKT,SIG,32768,BMAG,42832,BAZ,-12.3,BEL,24.8,TMAG,46986,TAZ,163.8,TEL,9.3,GRAD,-31590,DEPCM,-392.6,DEPIN,-154.6,CUR,0*73
$SEEKT,LCD,DSIG,86,PROX,0,GRAD,-57,FUZ,18,DEP,-1,COA,333,FREQ,32768;1,TRAC,1,BAT,7,LCOR,183;136;56;104;0;515,SYS,-1863,GPSE,5*6e
$SEEKT,SIG,32768,BMAG,51970,BAZ,103.6,BEL,18.9,TMAG,60674,TAZ,150.2,TEL,9.8,GRAD,-17268,DEPCM,-189.4,DEPIN,-74.5,CUR,0*58
$SEEKT,LCD,DSIG,86,PROX,0,GRAD,-57,FUZ,22,DEP,-1,COA,0,FREQ,32768;1,TRAC,1,BAT,7,LCOR,206;95;66;124;0;515,SYS,-1859,GPSE,5*5a
$GPGGA,224323.000,3248.7448,N,11707.1511,W,4,9,1.0,130.4,M,0,M,0,0,5.22*6C
$GPGLL,3248.7448,N,11707.1511,W,224323,A*38
$GPGSA,A,3,3,6,14,18,19,21,22,24,27,,,,0.0,1.0,0.0*32
$GPZDA,224323,03,12,2013,00,00*4E
$GPVTG,346.39,T,0.00,M,0.00,N,0.00,K,A*28
$GPGSV,3,1,12,31,7,117,21,21,67,84,16,18,79,39,33,22,126,7,43*78
$GPGSV,3,2,12,6,78,159,19,19,64,199,44,14,148,134,20,3,67,176,42*44
$GPGSV,3,3,12,11,10,210,17,24,36,37,29,27,86,168,16,133,98,96,0*7E
$SEEKT,SIG,32768,BMAG,55866,BAZ,-19.6,BEL,28.9,TMAG,65540,TAZ,152.5,TEL,12.8,GRAD,-18943,DEPCM,-548.6,DEPIN,-216.0,CUR,0*45
```

Ln 37, Col 67

Understanding the Data Log File

The first line of the data log file is the file’s header and it contains the SeekTech String Identifier, Header Identifier, Time (HHMMSS), Date (yyyymmdd), Receiver Name, Serial Number, and Processor Versions.

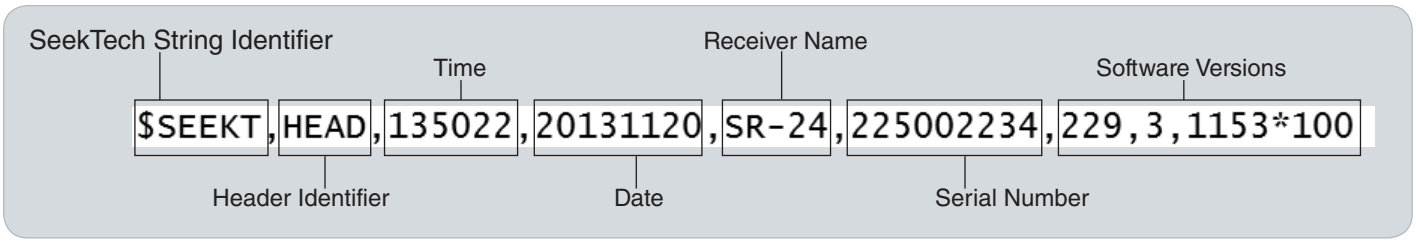

Logged data contains a SeekTech String Identifier or NMEA Identifier Prefix, a Grouping Identifier, a Data Abbreviation, and the Value of the data measured by the SR-24. SIG or LCD data string begins with the SeekTech String Identifier, followed by the SeekTech Grouping Identifier, Data Abbreviation, and the Value.

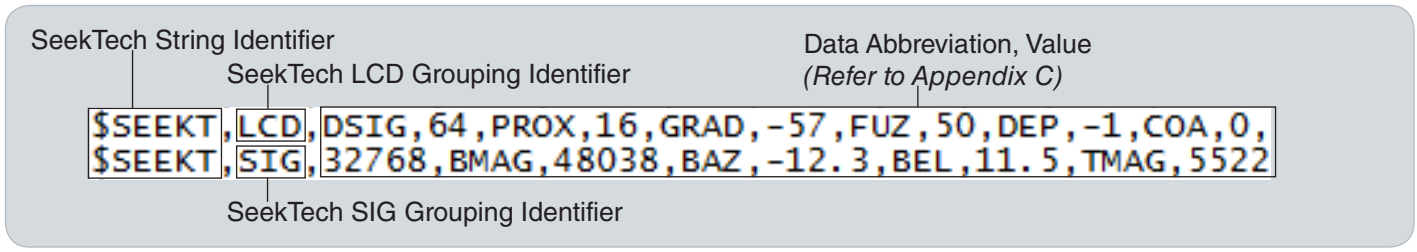

GPS data begins with the NMEA Identifier Prefix followed by the Data Abbreviation, NMEA Data, and NMEA Style Check Sum.

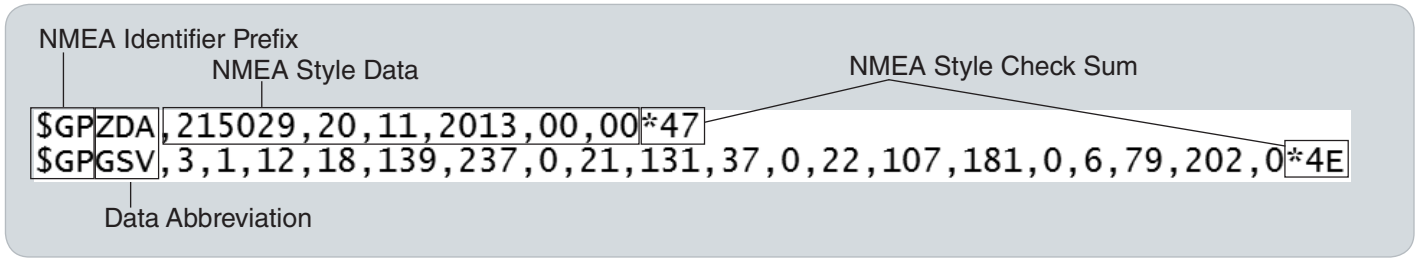

The Data Abbreviation indicates the type of data and the value indicates the recorded measurement. If the recorded measurement is zero, the SR-24 is measuring a zero for that specific data element.

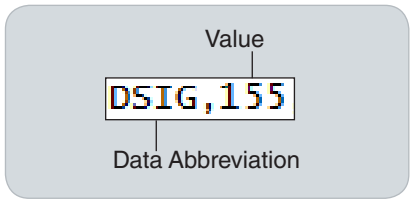

If specific data elements are disabled, they do not appear in the data log file. Refer to the Disable Data section for instructions on how to disable specific data elements.

In the data log file, a User-Initiated Data snapshot contains the time and date the snapshot was taken. The Time stamp string is located beneath the header.

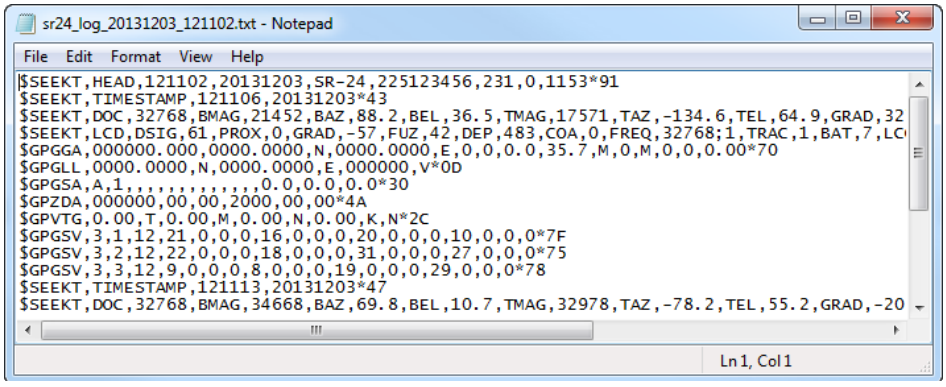

SD Card Information

The SD Card Information screen gives you a report of the amount of space remaining on the SD card. To view the SD Card Information screen, follow these steps:

1. Press the Menu Key to open the Main Menu.
2. Use the Down Arrow Key to highlight the SD Card icon .
3. Press the Select Key to open the SD Card menu.
4. Press the Down Arrow Key to navigate to the Information icon and press the Select Key .

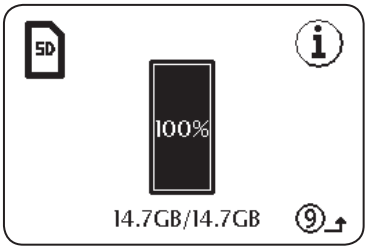

Units of Measurement

The SR-24 can display measured depth in meters (m) or feet (ft). To change the measurement units, open the Main Menu and press the Down Arrow Key to navigate to the Depth Units icon Feet ↔ Meter. Press the Select Key to toggle between Meter or Feet. Press the Menu Key to save and exit.

LCD Contrast

To adjust the LCD contrast, open the Main Menu and press the Down Arrow Key to navigate to the LCD Contrast icon LCD. Press the Select Key to open the contrast adjustment screen. Use the Left and Right Arrow Keys to adjust the contrast. Press the Menu Key to save and exit.

Custom Frequencies

You can create, store, edit, and delete up to 30 unique, custom frequencies on your SR-24. You can create custom frequencies ranging from 10 Hz to 35 kHz, making the SR-24 compatible with transmitters made by many manufacturers.

Create Custom Frequencies

To create a new custom frequency, follow these steps:

1. Press the Menu Key to open the Main Menu.
2. Use the Down Arrow Key to highlight the Custom Frequency icon .
3. Press the Select Key to open the Custom Frequency menu.
4. There are three types of frequencies you can create
   - Sonde
   - Active Line Trace
   - Passive Line Trace
5. Highlight the type of frequency you want to create and press the Select Key .

   Note: There are additional preprogrammed frequencies that can be added to the active frequency list from this menu. Press the Select Key to toggle the frequencies active and inactive.
6. Press the Select Key again to display the Frequency Input screen.

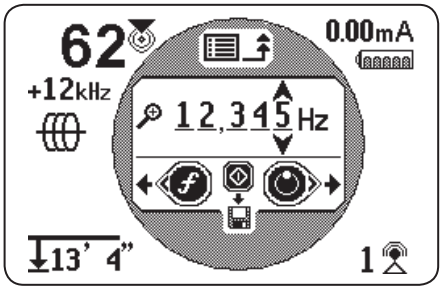

Note: You can tune the SR-24 to a frequency by watching the Signal Strength in the lower right of the screen while adjusting the frequency.

7. Use the Left and Right Arrow Keys to move between digits and use the Up and Down Arrow Keys to increase and decrease the value of the digits.
8. Press the Select Key to save the custom frequency.

   Note: A plus sign icon + appears between the check box and the frequency.

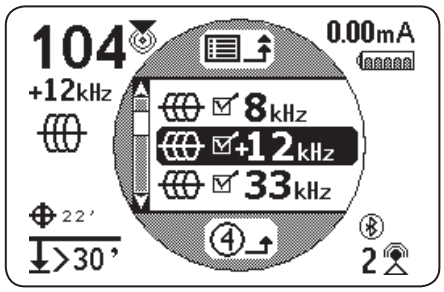

9. Press the Menu Key to save and exit.

   Note: The custom frequency you created is the selected frequency.

Edit Custom Frequencies

To edit custom frequencies, follow these steps:

1. Open the Custom Frequency menu and highlight the custom frequency that you want to edit.

   Note: Refer to steps 1 through 3 in the Custom Frequencies section for instructions on how to access the Custom Frequencies menu.

2. Press the Frequency Key to open the Frequency Input screen.
3. Use the Left and Right Arrow Keys to move between digits and use the Up and Down Arrow Keys to increase and decrease the value of the digits.
4. Press the Menu Key to save and exit. The custom frequency you edited is the selected frequency.

Note: Alternatively, you can highlight the custom frequency that you would like to edit from the Main Menu. Once highlighted, press the Frequency Key and the Frequency Input Screen automatically opens.

Delete Custom Frequencies

To delete custom frequencies, follow these steps:

1. Open the Custom Frequency menu and highlight the custom frequency that you want to delete.

   Note: Refer to steps 1 through 3 in the Custom Frequencies section for instructions on how to access the Custom Frequencies menu.

2. Press the Frequency Key to open the Frequency Input screen.
3. Change all digits to zero.
4. Press the Select Key to delete the frequency.
5. Press the Menu Key to save and exit.

Note: Alternatively, you can highlight the custom frequency that you would like to delete from the Main Menu. Once highlighted, press the Frequency Key and the Frequency Input Screen automatically opens.

Commonly Used Frequency List

In addition to creating custom frequencies, you can select frequencies commonly used by manufacturers of other transmitters.

To access the commonly used frequency list, follow these steps:

1. Access the Frequency Input screen through the Custom Frequencies menu.

   Note: Refer to the Custom Frequencies section for instructions on how to access the Frequency Input screen.

2. In the Frequency Input screen, use the Left Arrow Key to move the cursor to the left side of the screen.
3. Press the Frequency Key one space past the far left digit to display the list of commonly used frequencies.

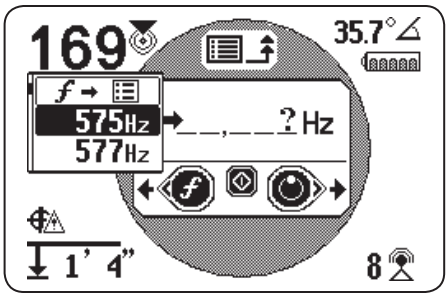

4. Use the Up and Down Arrow Keys to highlight the frequency that you want to add to the list of custom frequencies.
5. Press the Select Key to enter the frequency into the blank digit fields.
6. Press the Select Key again to save the frequency as a custom frequency.
7. Press the Menu Key to exit.

Settings

To open the Settings menu, press the Menu Key and use the Down Arrow Key to navigate to the Settings icon. Press the Select Key to open the Settings menu.

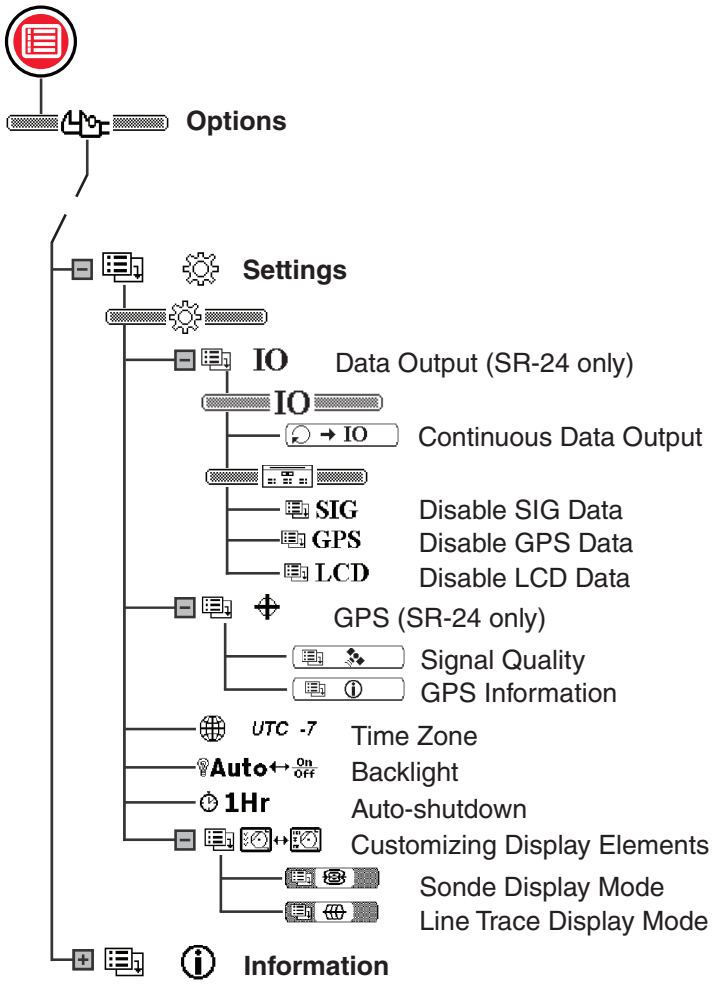

IO Menu

The following section applies to the SR-24 only.

The IO feature sends the SR-24's locate data to the internal SD card, or to a Bluetooth device if one is available, or to both simultaneously.

Note: Refer to the SD Card section for information about the SD card and how to read the data log file.

Data can be logged continuously (default), or manually at specific points during a locate, by enabling User-Initiated Data Output.

You can disable an entire category or specific elements within a category. Refer to Appendix C for descriptions of the data logging elements.

User-Initiated Data Output

The User-Initiated Data Output function is disabled by default. Enable User-Initiated Data Output to set the SR-24 to only output data when you press the Select Key.

To enable User-Initiated Data Output, follow these steps:

1. Open the Settings menu and use the Down Arrow Key to navigate to the IO icon IO.
2. Press the Select Key to open the Data Output menu.
3. Highlight the Continuous Data Output icon → IO in the Data Output menu and press the Select Key to toggle between disabled (default) and enabled → IO.
4. Press the Menu Key to save and exit.

To use the User-Initiated Data Output function during the locate, do one of the following:

- A short press on the Select Key to output a snapshot of the instant data.
- A long press on the Select Key to output a snapshot of the data averaged.

Note: When performing a long press, the SR-24 outputs data averaged at the same time the Depth Average report displays.

Data Selection

Use these menus to enable and disable specific components of the data output. Disable all or part of a specific data element to reduce the amount of data that is logged and output onto the internal SD card.

All categories of data are output by default. To disable all or part of a specific data element, follow these steps:

1. Open the Settings menu and use the Down Arrow Key to highlight the IO icon IO.
2. Press the Select Key to open the Data Output menu.
3. Press the Down Arrow Key to navigate to the category of data that you want to disable: SIG, GPS, or LCD.
   - To disable or enable all data elements as a group press the Select Key to toggle between disabled ✕ and enabled ✓.
   - Or, use the Up and Down Arrow Keys to highlight a specific data element and press the Select Key to disable and enable the individual data element by checking and unchecking the box next to the data abbreviation.

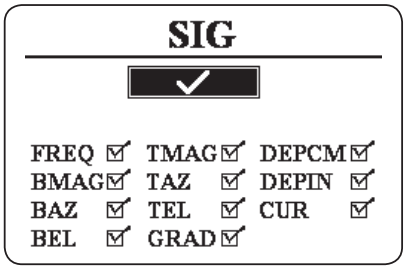

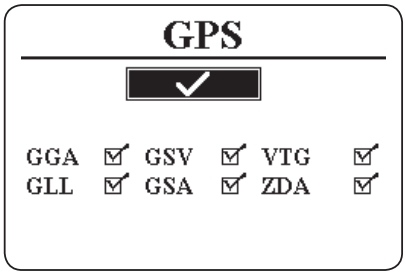

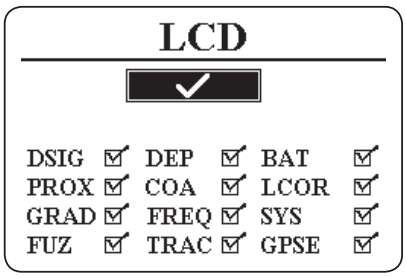

4. Press the Menu Key to save and exit.

SR-24 GPS

The following section applies to the SR-24 only.

The SR-24 has an internal GPS receiver that provides location data to the receiver. The GPS data is stored on the SD card and can be logged to a Bluetooth device through a Bluetooth connection.

Note: Refer to the Data Logging section for instructions on how to export data log files to your computer.

The SR-24 is compatible with Bluetooth 2.0 devices including many phones, tablets, and GPS units. Refer to www.RIDGID.com/SR24 for a list some models that have been tested to work with the SR-24.

GPS Accuracy

GPS accuracy is measured in a variety of different ways, all are statistical in nature. According to the documentation supplied by the manufacturer of the internal SiRFstarIV GPS module, its nominal accuracy is "< 2.5 m (65 percent, 24 hour static, -130 dBm)." This indicates that under ideal conditions, the GPS receiver is capable of accuracy such that each point collected would have a 65 percent chance of being inside a circle with a 2.5 m [8.2 ft] radius extending from the true location. It is able to do this under ideal conditions with a strong signal (-130 dBm) over a 24 hour test, during which the GPS unit is not moving.

The actual accuracy of a GPS device is highly variable and based on many factors such as obstacles in the physical environment, atmospheric conditions, and the quality of the GPS satellite constellation.

The GPS icon displayed on screen indicates the status of the position fix. The GPS Status icon indicates that the GPS is searching for a position solution. When the SR-24 GPS finds a position solution, the GPS Estimated Positional Error icon, for example 4 m, appears on the SR-24 screen to indicate the SiRFstarIV's position lock status and to provide an estimated positional error.

The estimated positional error indicates that a given solution is within the stated accuracy, approximately 65 percent of the time. In the following example, 65 percent of the solutions would be within a circle with a 4 m [13 ft] radius. For example, the following graphic shows the SiRFstarIV's actual position is inside the circle, 65 percent of the time.

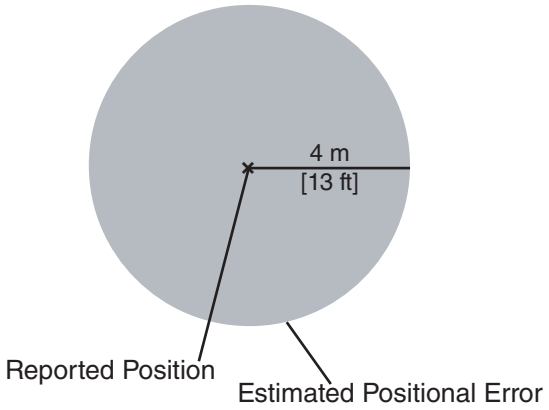

Using the SR-24 with External GPS Software

The SR-24 can communicate the SIG, GPS, or LCD data it collects to external GPS mapping devices and GIS software. To interpret the SR-24's data, the external GPS software and the SR-24 must be connected through Bluetooth and the GPS software must be able to interpret data from a Bluetooth source.

Note: For specifications on external GPS software accuracy, consult the external GPS vendor.

Signal Quality

You can monitor the SR-24's internal GPS receiver signal quality from the GPS menu. To open the GPS menu, follow these steps:

1. Open the Settings menu and press the Down Arrow Key to navigate to the GPS icon .
2. Press the Select Key to open the GPS menu.
3. Press the Down Arrow Key to navigate to the Signal Quality icon and press the Select Key to open the Signal Quality screen.

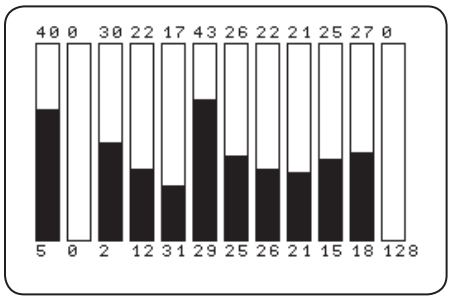

Each bar indicates the signal quality of different satellites. Higher numbers indicate better signal quality. Signal quality can be affected by the availability of a clear view to the signal and by the number of satellites that are currently available.

GPS Information

To view the GPS Information screen, follow these steps:

1. Open the Settings menu and press the Down Arrow Key to navigate to the GPS icon .
2. Press the Select Key to open the GPS menu.
3. Press the Down Arrow Key to navigate to the Information icon and press the Select Key .

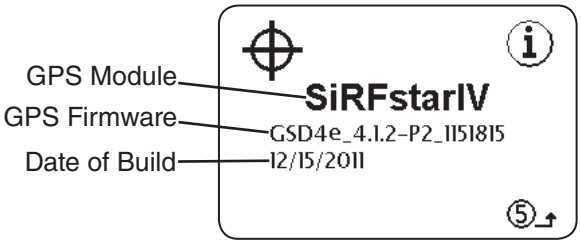

Note: GPS is always on. To disable GPS data from logging to the internal SD card or your Bluetooth device, refer to the Disable Data section.

Time Zone

Change the time zone setting in the Time Zone screen. To change the time zone, open the Settings menu and press the Down Arrow Key to navigate to the Time Zone icon UTC -4. Press the Select Key to cycle through time zones. Press the Menu Key to save and exit.

Note: Look up your time zone code at 24timezones.com

LCD Backlight

The SR-24 has a light sensor built into the Keypad that can automatically adjust the LCD backlight. The default setting, Auto, is configured to automatically turn on the backlight for the LCD in low light conditions.

To change the backlight settings, open the Settings menu and press the Down Arrow Key to navigate to the Light Bulb icon Auto. Press the Select Key to toggle between the "On," "Off," and "Auto" backlight options. Press the Menu Key to save and exit.

Auto-shutdown

By default, the SR-24 powers off automatically if no Keys are pressed for over one hour. If you disable Auto-shutdown the SR-24 will stay powered on until the batteries are fully discharged.

To change the Auto-shutdown setting, open the Settings menu and press the Down Arrow Key to navigate to the Clock icon 1Hr. Press the Select Key to toggle between one hour and off . Press the Menu Key to save and exit.

Customizing Display Elements

In Active Line Trace Mode and Sonde Mode you can customize the display elements that appear on screen. A checked box means the element is enabled and an unchecked box means it is disabled. From the Customizing Display Elements Screen, press the Select Key to check and uncheck boxes.

Note: Any changes made to Active Line Trace Mode also apply to Passive Line Trace Mode and vice versa.

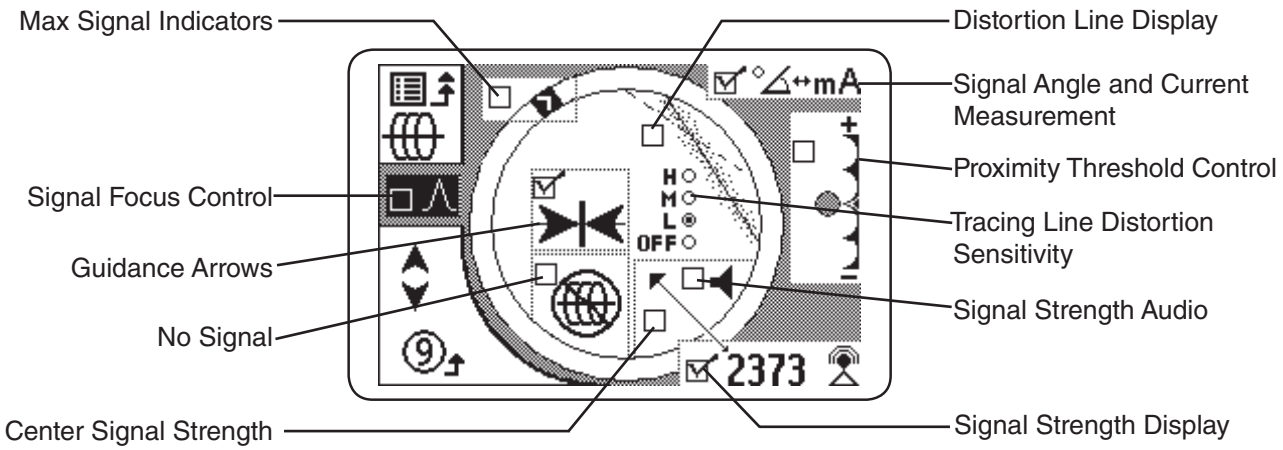

Note: The settings shown here are the SR-24's defaults.

Customizable Display Elements		
Element	**Line Trace Mode**	**Sonde Mode**
Race Track, Watermark, Level Pointer	●	●
No Signal Icon	●	●
Center Signal Strength	●	
Proximity Threshold Control	●	
Tracing Line Distortion Sensitivity	●	●
Distortion Line	●	●
Guidance Arrows	●	
Current Measurement	●	
Signal Angle	●	●
Signal Strength Audio	●	●
Signal Strength	●	●

To customize display elements, follow these steps:

1. Open the Settings menu and press the Down Arrow Key to navigate to the Customizing Display Elements icon .
2. Press the Select Key to open the Display Elements menu and highlight the mode you want to customize the display for: either Sonde Mode or Line Trace Mode .
3. Press the Select Key to open the customization screen.
4. Use the Up and Down Arrow Keys to highlight an option and press the Select Key to check and uncheck the options. Check the box to enable the feature and uncheck the box to disable it.
5. Press the Menu Key to save and exit.

Max Signal Indicators

The Race Track, Watermark, and Level Pointer work together to dynamically give you points of reference for the highest signal the SR-24 detects. The information provided by these indicators can find the maximum signal strength during your locating process.

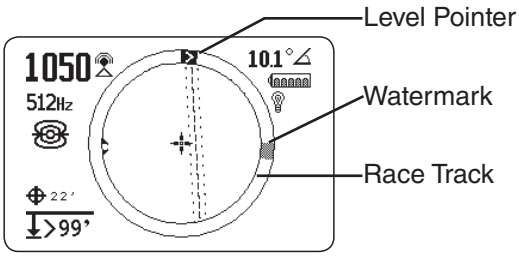

The Race Track is the circular track around the Active View Area. As you move the receiver, the Level Pointer moves clockwise around the Race Track as Signal Strength increases and regresses counterclockwise when the Signal Strength decreases. When the Signal Strength begins to decrease, a Watermark is left behind to represent the highest signal level detected.

In Sonde Mode, the Watermark represents the highest Signal Strength detected by the receiver. In Line Trace Modes the Watermark represents the highest Proximity Number reached.

In many cases when the Watermark appears and the Level Pointer begins moving counter clockwise, then you may be moving away from the target line.

Proximity Number and Threshold

The Proximity Number is designed to increase as the SR-24 gets closer to the target line. In many cases, maximizing the Proximity Number is a more accurate way of pinpointing the location of the target line than Signal Strength alone.

Use the Proximity Threshold Control to tell the receiver to ignore targets with depth measurements outside of a defined range. By setting a threshold for the maximum depth you can reduce the amount of spurious display artifacts that may distract from the locating process.

If the measured depth of the target line is less than the proximity threshold, the Proximity Number appears as zero and the Mapping Display is suppressed. If the measured depth is greater than the proximity threshold, the Proximity Number is displayed and the Mapping Display is shown.

Proximity Threshold Settings	
Depth	**Control**
	No threshold, no suppression, and allows negative depth display. Negative depth display appears on a black background in the bottom left corner.
>30m	For detections where measured depth is no greater than 30 m [98 ft].
>10m	For detections where measured depth is no greater than 10 m [33 ft].
>3m	For detections where measured depth is no greater than 3 m [10 ft].
>1m	For detections where the measured depth is greater than 1 m [3 ft].
	Displays the Signal Strength to screen center, suppresses the map display, allows negative depth to display, and audio signals reflect Signal Strength.

Note: The Greater Than icon > only appears when the receiver detects utility lines that are deeper than the depth shown.

To adjust the Proximity Threshold Control, follow these steps:

1. Activate the Proximity Threshold Control in the display settings.

   Note: Refer to the Customizing Display Elements section for instructions on how to activate the Proximity Threshold Control.

2. Check the box to the Proximity Threshold Control setting.
3. Press the Menu Key to save and exit.
4. Press and hold the Up Arrow Key for half a second to set the threshold higher or the Down Arrow Key to set the threshold lower.
5. Press and hold the Down Arrow Key past the lowest Proximity Threshold range and the Signal Strength appears in the center of the screen.

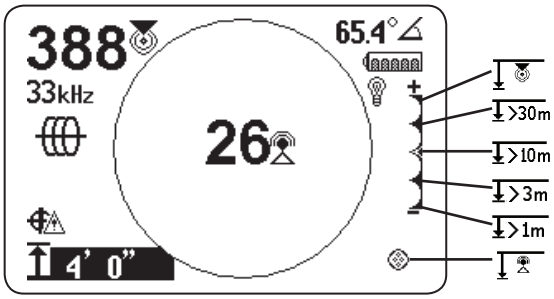

Note: The depth measurement appears on a black background when the SR-24 is measuring a negative depth (signal from above the SR-24).

Proximity Threshold Control

When the measured depth is greater than the Proximity Threshold Control limit set in the menu, the sound is muted. By default, the Proximity Threshold Control is disabled. When the Proximity Threshold Control is disabled, the sound automatically mutes when measured depth is greater than 30 m [99 ft].

Information Options

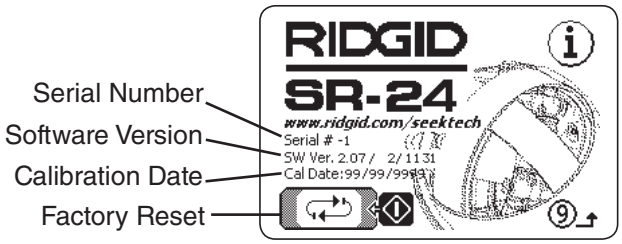

Factory Reset Options

The SR-24 contains two reset options:

- Complete factory reset of the device
- Delete custom frequencies only

To do a factory reset, follow these steps:

1. Press the Menu Key to open the Main Menu.
2. Navigate to the Information icon and press the Select Key.
3. Press the Select Key to open the Factory Reset menu.
4. Press the Up and Down Arrow Keys to highlight either a complete factory reset or restore factory frequencies and delete custom frequencies.
5. Press the Select Key to select your desired reset option.

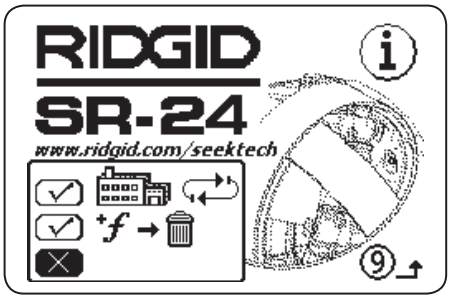

Maintenance and Support

Cleaning

⚠ WARNING

Remove batteries prior to cleaning the SR-24 to reduce the risk of electrical shock.

Do not use liquid or abrasive cleaners, solvents, or scraping tools to clean the SR-24. Do not immerse in water or allow any liquid to enter the unit.

Clean with damp cloth and mild detergent. Only clean screen with cleaners approved for use on LCD screens.

Accessories

⚠ WARNING

The following accessories have been designed for use with the SR-24. Other accessories may become hazardous when used with the SR-24. To reduce the risk of serious injury, only use accessories specifically designed and recommended for use with the SR-24.

The following accessories have been designed for use with the SR-24:

- RIDGID SeekTech Transmitters
  - ST-305
  - ST-510
  - ST-33Q+
- RIDGID SeekTech Inductive Signal Clamp
- Sondes
  - FloatSonde
  - Battery Sonde
  - SeeSnake camera integrated Sonde (Flexmitter)

Transportation and Storage

Store and transport your equipment with the following in mind:

- Keep in a locked area out of the reach of children and people unfamiliar with its operation.
- Put in a dry place to reduce risk of electrical shock.
- Store away from heat sources such as radiators, heat registers, stoves, and other products (including amplifiers) that produce heat.
- Storage temperature should be -20°C to 60°C [-4°F to 140°F].
- Do not expose to heavy shocks or impacts during transportation.
- Remove the batteries before shipping and before storing for extended periods of time.

Service and Repair

⚠ WARNING

Improper service or repair can make the SR-24 unsafe to operate.

Service and repair of the SR-24 must be performed by a RIDGID Independent Authorized Service Center. To maintain the safety of the tool, make sure a qualified repair person services your equipment using only identical replacement parts. Discontinue using the SR-24, remove the batteries, and contact service personnel under any of the following conditions.

- The equipment does not operate normally when operating instructions are followed.
- The equipment exhibits a distinct change in performance.
- The equipment has been dropped or damaged.
- Liquid has been spilled or objects have fallen into the equipment.

For information on your nearest Ridge Tool Technical Service Department or any service or repair questions:

- Contact your local RIDGID distributor.
- Go to www.RIDGID.com.
- Email the RIDGID Technical Services Department at rtctechservices@emerson.com.
- Call 1-800-519-3456 (USA and Canada only).

Disposal

Parts of the SR-24 contain valuable materials that can be recycled. There are companies that specialize in recycling that may be found locally. Dispose of the components in compliance with all applicable regulations. Contact your local waste management authority for more information.

For EC countries: Do not dispose of electrical equipment with household waste!

According to the European Guideline 2002/96/EC for Waste Electrical and Electronic Equipment and its implementation into national legislation, electrical equipment that is no longer usable must be collected separately and disposed of in an environmentally correct manner.

Troubleshooting		
Problem	**Probable Fault**	**Solution**
SR-24 locks up during use	—	Power off the SR-24 and then power on. Remove the batteries if the unit will not turn off. Replace the batteries if low.
SR-24 will not pick up signal	—	Make sure the mode and frequency are correctly set. Examine the transmitter connections and make necessary improvements. Relocate the transmitter, change the grounding or frequency, modify the proximity threshold, or change the signal focus control settings.
While line tracing, lines jump around the screen in the mapping display	SR-24 not receiving the signal or interference is present.	Make sure the transmitter is well connected and grounded. Point the SR-24 at either lead to ensure that adequate levels of current are flowing on the target line.
		Use a higher frequency, connect to a different point on the line, or switch to Inductive Mode.
		Determine and eliminate the source of distortion.
		Make sure the batteries are fully charged.
While locating a Sonde, lines jump around the screen	Sonde batteries may be low or Sonde may be too far away.	Make sure the batteries in the Sonde are fully charged.
		Start the Sonde locate with the Sonde located closer or perform an area search.
		Place the antenna close to the Sonde to verify the signal. Note that Sondes have difficulty emitting signals through cast iron and ductile iron lines.
		Increase the proximity threshold and try lower settings of signal focus control to improve the focus on weaker signals.
Distance between the Sonde and either pole not equal	Sonde may be tilted or cast iron to plastic transition.	Refer to the section of locating tilted Sondes.
Unit acts erratic and does not power off	Batteries may be low.	Replace batteries.
Display appears completely dark or completely light when on	When the SR-24 gets too hot, the LCD will darken. When it gets too cold, it will lighten.	Power off the SR-24 and then power on. Adjust the LCD contrast.
No sound is audible	—	Adjust the sound level. Verify that the Proximity Number is greater than zero.
The SR-24 will not power on	Faulty batteries or blown fuse.	Check the orientation of the batteries and that they are fully charged. Make sure the battery contacts are not damaged. Fuse is not user-replaceable, contact an Authorized Service Center.

Appendices

Appendix A: Glossary of Terms

- **Active Frequencies.** A frequency with the box checked on the Main Menu ☑. To cycle through active frequencies press the Frequency Key.
- **Active Line Tracing.** A mode of locating using a line transmitter to induce a chosen frequency onto a line. The receiver traces the line by detecting the frequency.
- **Active View Area.** The area inside the circle in the center of the display screen. The Tracing Line, Sonde Pole, and Equator symbols appear in the Active View Area.
- **Bleed Over.** Bleed over happens when the frequency from the transmitter couples current onto nearby non-target lines. The SR-24 can receive the same frequency on multiple non-target lines.
- **Clear Signal.** When the receiver detects a strong, undistorted current flowing on the target line. A clear signal depends on good conductivity, good grounding, and adequate current through the target line.
- **Clipping.** When the signal is too strong to be processed all at once by the SR-24's signal processor. When clipping occurs, a warning flashes on the screen.
- **Common Bonding.** When more than one line is grounded through the same ground connection. Common bonding can cause the same active frequency to be coupled onto non-target utilities. .
- **Coupling.** The transfer of energy between the target utility and other non-target utilities.
- **Cross Hairs.** The symbol that represents the receiver's location relative to the field of the target line. The cross hairs appear at the center of the Active View Area.
- **Current Measurement (mA).** The level of current in miliamps based on the field strength detected by the Omnidirectional antennas and the measured depth.
- **Distortion.** The impact of nearby fields, near-by conductors, magnetic flux, or other interference on the circular electromagnetic field. Distortion is detected by comparing the information from the Tracing Line, Proximity Number, Signal Strength, measured depth, and Signal Angle readings from the upper and lower antennas.
- **Distortion Line.** The dashed line that appears in the Active View Area when the Tracing Line Distortion Response is disabled. The Distortion Line indicates the location of the target utility measured by the Upper Antenna. Use the Distortion Line to visualize distortion in the detected field.
- **Frequency.** The number of times per second that an electromagnetic field forms and collapses. Frequency is expressed in hertz (Hz) or kilohertz (kHz).
- **Guidance Arrows.** The arrows icon in the Active View Area that indicates where the target line's field is balanced.
- **Level Pointer.** A solid pointer that moves around a circular track to indicate the Signal Strength detected.
- **Measured Depth.** The calculated depth, distance to the Sonde, or the apparent center of the target line. Potholing may be required before excavation to determine accuracy of the target line's physical depth.
- **Omnidirectional Antenna.** Proprietary antenna technology capable of simultaneously detecting electromagnetic fields on three axes.
- **OmniSeek®.** A Passive Line Trace Mode that searches all power and radio frequency bandwidths simultaneously.
- **Passive Line Tracing.** A mode of line tracing that does not require a transmitter to place a current on the line. The SR-24 is able to locate by receiving current through the target line from an external energy source.
- **Pole.** Represents where the field lines from the Sonde vertically exit the ground. One of the two ends of a dipole field.

- **Proximity Number .** A number that reflects how close the receiver is to the target line when in either Active Line Trace Mode or Passive Line Trace Mode. The Proximity Number is calculated based on the signal received by the two Omnidirectional antennas. The Proximity Number increases with signal strength and also increases with decreasing depth.
- **Proximity Threshold.** A control which decreases possible distortion by constraining the receiver's locating range.
- **Radio Frequency Broadband .** The SR-24 searches for signal energy within a specific range of frequencies.
- **Signal Angle .** The angle of the target line's field relative to the horizontal plane.
- **Signal Strength .** The strength of the target line's field signal as detected by the lower Omnidirectional antenna in three dimensions.
- **Sonde .** A self contained transmitter that emits a dipole field and is used to locate a point within an underground pipe, tunnel, or conduit.
- **Target Line.** The utility line that your transmitter is connected to on a locate.
- **Tracing Circuit.** The complete flow of electrical current from the transmitter through the conductor and back to the ground. Weak current will cause a weak signal.
- **Tracing Line Distortion Response.** When the Tracing Line appears fuzzy because distortion is present.

Appendix B: Main Menu Map

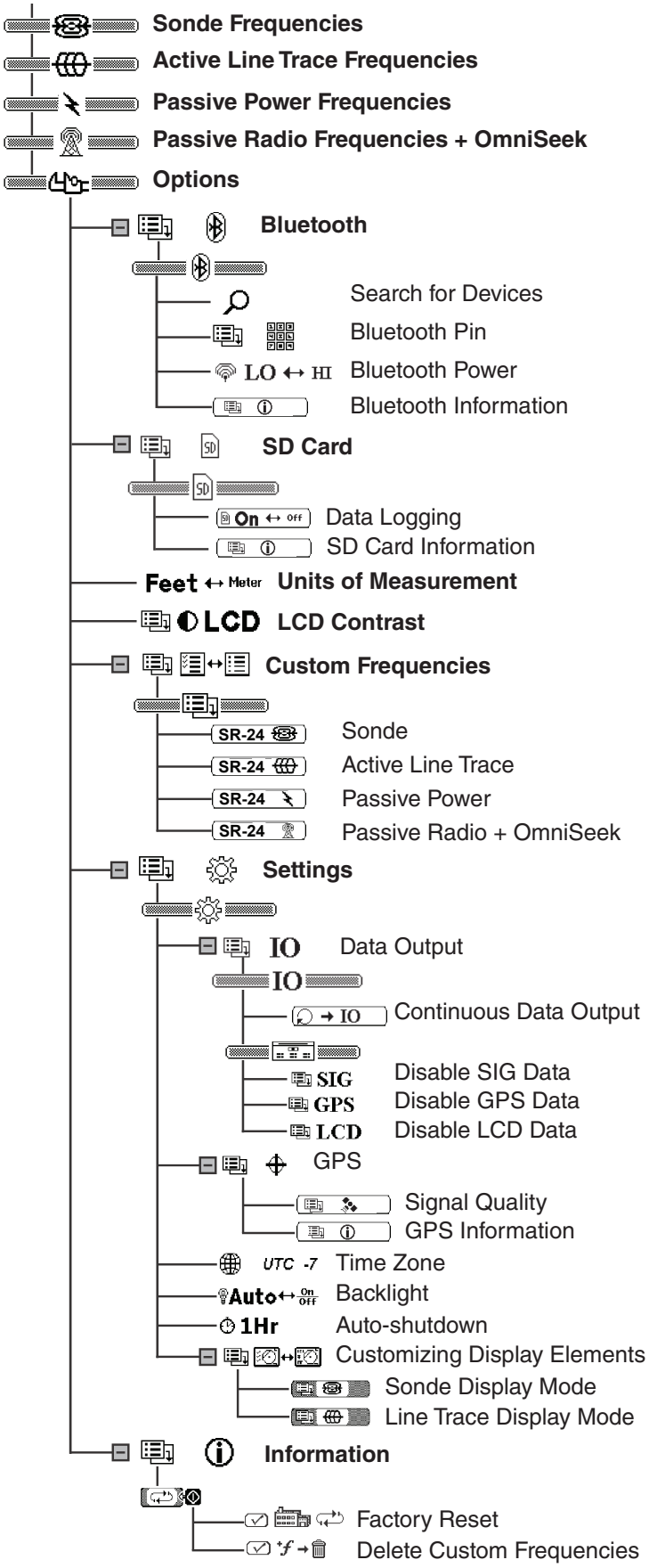

Appendix C: Data Logging Abbreviations

Data Logging Abbreviations				
Main Menu Header	**String Identifier**	**SeekTech Grouping Identifier**	**Data Abbreviation**	**Description**
SIG	$SEEKT	SIG	FREQ	The signal frequency (Hz) of the SR-24.
			BMAG	The magnitude of the signal received by the Lower Antenna in the range of -2^{15} to 2^{15-1}. Clipping may be occurring when the magnitude value is unstable.
			BAZ	The azimuth angle (degrees) of the signal received by the Lower Antenna.
			BEL	The elevation angle (degrees) of the signal received by the Lower Antenna.
			TMAG	The magnitude of the signal received by the Upper Antenna in the range of -2^{15} to 2^{15-1}. Clipping may be occurring when the magnitude value is unstable.
			TAZ	The azimuth angle (degrees) of the signal received by the Upper Antenna.
			TEL	The elevation angle (degrees) of the signal received by the Upper Antenna.
			GRAD	The gradient value from -32768 to 32767.
			DEPCM	The depth of the target line in centimeters (cm).
			DEPIN	The depth of the target line in inches (in).
			CUR	The Current Measurement in miliamps (mA) detected by the SR-24.

Data Logging Abbreviations				
Main Menu Header	**String Identifier**	**SeekTech Grouping Identifier**	**Data Abbreviation**	**Description**
LCD	$SEEKT	LCD	DSIG	The magnitude of the signal received by the SR-24.
			PROX	The number representing the nearness of the target line to the SR-24.
			GRAD	The gradient offset in pixels.
			FUZ	The value determining the fuzziness of the line being displayed.
			DEP	The depth for the target line in millimeters (mm).
			COA	The current (mA) or the angle of the signal received by the SR-24.
			FREQ	The current frequency filter and the type of frequency: narrow band or broadband.
			TRAC	The locating mode (Sonde, Active Line Trace, Passive Power, or Passive Radio Frequency).
			BAT	The level of battery remaining in levels (0-7).
			LCOR	The line coordinates (x1, y1, x2, y2) in pixels. Sonde pole coordinates (Sx, Sy). Each coordinate is separated by a semi-colon.
			SYS	The different system display states (Attenuator, Clipping, Polar Angle/Current, Backlight on/off, Feet/Meters, GPS Lock Status, or Line/Current Suppression based on Depth).
			GPSE	The estimated GPS position error in meters (m).

Bit(s)	Description
0	Attenuator State (0=Off, 1=On)
1	ADC Clipping Status (0=Not Clipping, 1=Clipping)
2	Polar Angle or Current Value in COA (0=Polar, 1=Current)
3	Backlight States (0=Off, 1=On)
4	Feet/Meter State (0=Feet, 1=Meter)
5	GPS Lock Status (0=No Lock, 1=Lock)
6	Whether to show Polar Angle or Current (0=Don't Show, 1=Show)
7-8	Sonde Zoom Mode (0=No Zoom, 1=Zoom1, 2=Zoom2)

Data Logging Abbreviations				
Main Menu Header	**String Identifier**	**SeekTech Grouping Identifier**	**Data Abbreviation**	**Description**
GPS	$GP	None	GGA	NMEA: Global Positioning System Fix Data
			GLL	NMEA: Geographical Position, latitude/longitude
			GSV	NMEA: GPS Satellites in View
			GSA	NMEA: GPS DOP and Active Satellites
			VTG	NMEA: Track Made Good and Ground Speed
			ZDA	NMEA: Date and Time

Note: For information about NMEA GPS codes, visit www.nmea.org.

WWW.RIDGID.COM

Ridge Tool Company
400 Clark Street
Elyria, Ohio 44035-6001
USA

1-800-474-3443

Ridge Tool Europe
Schurhovenveld 4820
3800 Sint-Truiden
Belgium

+32 (0)11 598 620

© 2017 Ridge Tool Company. All rights reserved.

Every effort has been made to ensure that the information in this manual is accurate. Ridge Tool Company and its affiliates reserve the right to change the specifications of the hardware, software, or both as described in this manual without notice. Visit www.RIDGID.com for current updates and supplemental information pertaining to this product. Due to product development, the photos and other presentations specified in this manual may differ from the actual product.

RIDGID and the RIDGID logo are trademarks of Ridge Tool Company, registered in the USA and other countries. All other registered and unregistered trademarks and logos mentioned herein are the property of their respective owners. Mention of third-party products is for informational purposes only and constitutes neither an endorsement nor a recommendation.

iPad, iPhone, and iPod touch are trademarks of Apple Inc., registered in the USA and other countries. “Made for iPod,” “Made for iPhone,” and “Made for iPad” mean that an electronic accessory has been designed to connect specifically to iPod, iPhone, or iPad respectively, and has been certified by the developer to meet Apple performance standards. Apple is not responsible for the operation of this device or its compliance with safety and regulatory standards. Please note that the use of this accessory with iPod, iPhone, or iPad may affect wireless performance.

The Bluetooth word mark and logos are owned by the Bluetooth SIG, Inc.

Printed in USA

2017/12/27
748-024-519-EN-0A Rev D