KOHLER®

Toilet armrests
K-31636

Features
- 18" (457 mm) width between arms provides room for user to sit comfortably
- Arms can be easily raised to upright position when not in use
- 530 lb total weight capacity
- Easily installs between toilet bowl and seat – no need for mounting to wall or floor
- Easy-to-clean textured coating extends length of arm supports for positive grip and user comfort
- Fits select one- and two-piece KOHLER® toilets; not compatible with KOHLER® smart toilets

Material
- Durable metal construction

Installation
- Easy installation – no special tools required
- For residential use only

Recommended Products/Accessories
K-3551 Two-piece elongated toilet, 1.28 gpf
K-20197 Two-piece elongated toilet with skirted trapway, 1.28 gpf
K-20197-RA Two-piece elongated toilet with skirted trapway, 1.28 gpf
K-20198 ContinuousClean XT two-piece elongated toilet with skirted trapway, 1.28 gpf
K-45989 The Complete Solution® two-piece elongated toilet, dual-flush
K-5310 Two-piece elongated toilet with skirted trapway, 1.28 gpf
K-5310-RA Two-piece elongated toilet with skirted trapway, 1.28 gpf
K-31621 Two-piece elongated toilet, 1.28 gpf
K-31621-RA Two-piece elongated toilet, 1.28 gpf
K-3814 Two-piece elongated toilet with skirted trapway, 1.28 gpf
K-3814-RA Two-piece elongated toilet with skirted trapway, 1.28 gpf
K-5709 ContinuousClean XT two-piece elongated toilet with skirted trapway, 1.28 gpf
K-3837 Two-piece elongated toilet, 1.28 gpf
K-3837-RA Two-piece elongated toilet, 1.28 gpf
K-20450 Two-piece elongated toilet with skirted trapway, 1.28 gpf
K-20450-RA Two-piece elongated toilet with skirted trapway, 1.28 gpf
K-90097 ContinuousClean two-piece elongated toilet with skirted trapway, 1.28 gpf
K-9754 Two-piece elongated toilet, 1.6 gpf

Codes/Standards
None Applicable

KOHLER® One-Year Limited Warranty
See website for detailed warranty information.

Available Colors/Finishes
Color tiles intended for reference only.

Color	Code	Description
	0	White

Toilet armrests
K-31636

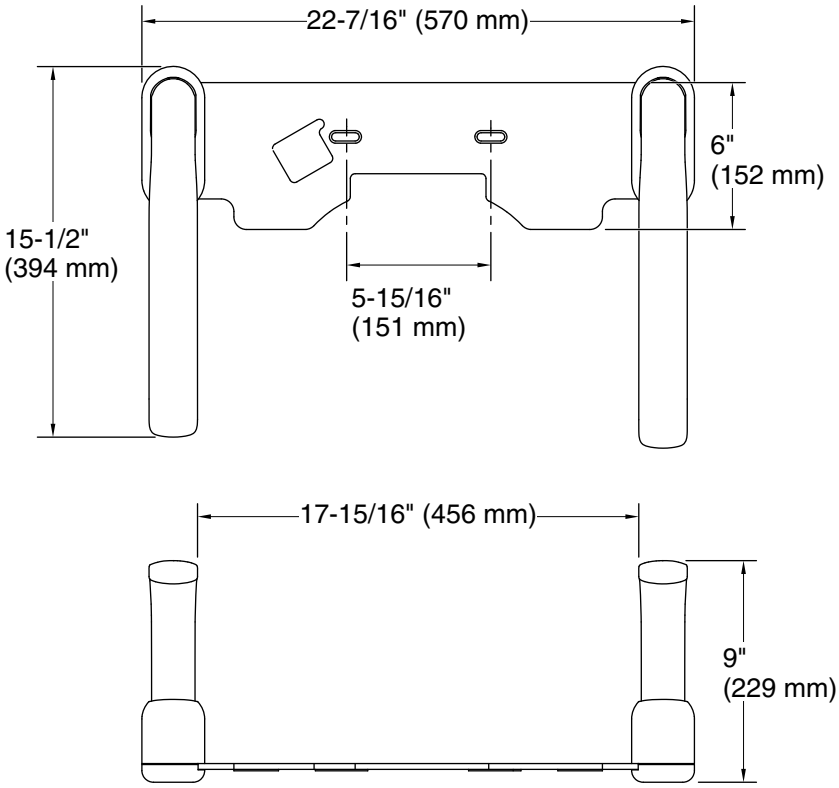

Technical Information

All product dimensions are nominal.

Material: Metal

Notes

Install this product according to the installation instructions.