insinkerator®

Food Waste Disposers

QUIET SERIES

Evolution Essential®

Submittal Sheet

The ideal choice for a wide range of applications.

- **Easy Swap**. Designed to fit existing InSinkErator disposers.
- **2-Stage MultiGrind®** technology for tougher food scraps like chicken bones.
- **Highest Durability**. Alloy stainless steel components with LeakGuard Liner.™
- Advanced noise reduction with insulated **SoundSeal® Technology**.
- Includes Quiet Collar® sound reducing sink baffle.

Specifications

Type of Feed	Continuous
On/Off Control	Wall Switch
Motor	Single Phase
HP	3/4
Volts	120
HZ	60
RPM	1725
Amp. (Avg. Load)	8.1
Time Rating	Intermittent
Lubrication	Permanently Lubricated Upper & Lower Bearings
Shipping Weight (Approx.)	20.0 lbs.
Unit Finish	Black Enamel Gray
Overall Height	12-1/4"
SoundSeal Technology	Anti-Vibration Mount® Anti-Vibration Tailpipe Mount™ Quiet Collar® Sink Baffle SoundLimiter® Insulation
MultiGrind Technology	GrindShear Ring®
Grind Chamber Capacity	34.6 oz.
Motor Protection	Manual Reset Overload
Average Water Usage	Approx. 1 Gallon Per Person Per Day
Average Electrical Usage	3-4 KWh Per Year
Drain Connection	1-1/2" Anti-Vibration (Hose Clamp)
Dishwasher Drain Connection	Yes

Dimensions

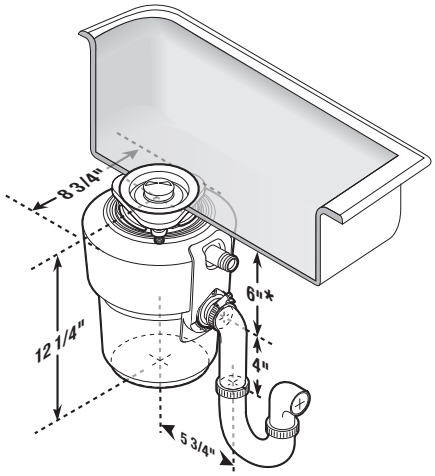

*Add 1/2" when stainless steel sinks are used.

Sample Specification

Food Waste Disposer(s) shall be InSinkErator Model Evolution Essential® with MultiGrind® and SoundSeal® technologies, 3/4 HP motor, Stainless Steel Grind components.

Warranty:
9-Year parts and in-home service.

* The complete InSinkErator warranty is included in the Care & Use Booklet packed with each unit.

Food waste is roughly 80% water. By using your disposal regularly, you can help divert food waste from landfills and reduce greenhouse gas emissions. Make sustainability a family affair by using your disposal. After all, the smallest changes can make the biggest impact.

Job Specifications

UL LISTED · UPC IAPMO Listed · ASSE 1008 · ASSE Sanitary Engineering · ASSEMBLED IN USA

1-800-558-5700
www.insinkerator.com

EMERSON™

The Emerson logo is a trademark and service mark of Emerson Electric Co. The mounting collar configuration is a trademark of Emerson Electric Co.

InSinkErator may make improvements and/or changes in the specifications at any time, in its sole discretion, without notice or obligation and further reserves the right to change or discontinue models.

© 2019 InSinkErator, InSinkErator® is a business unit of Emerson Electric Co. All Rights Reserved.