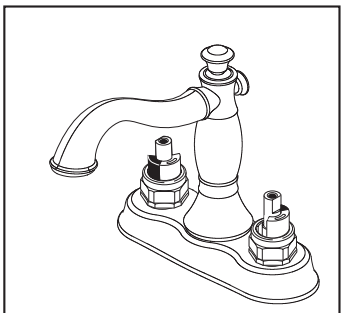

2597LF-▲MPU-LHP

Submitted Model No.:_____

Specific Features:_____

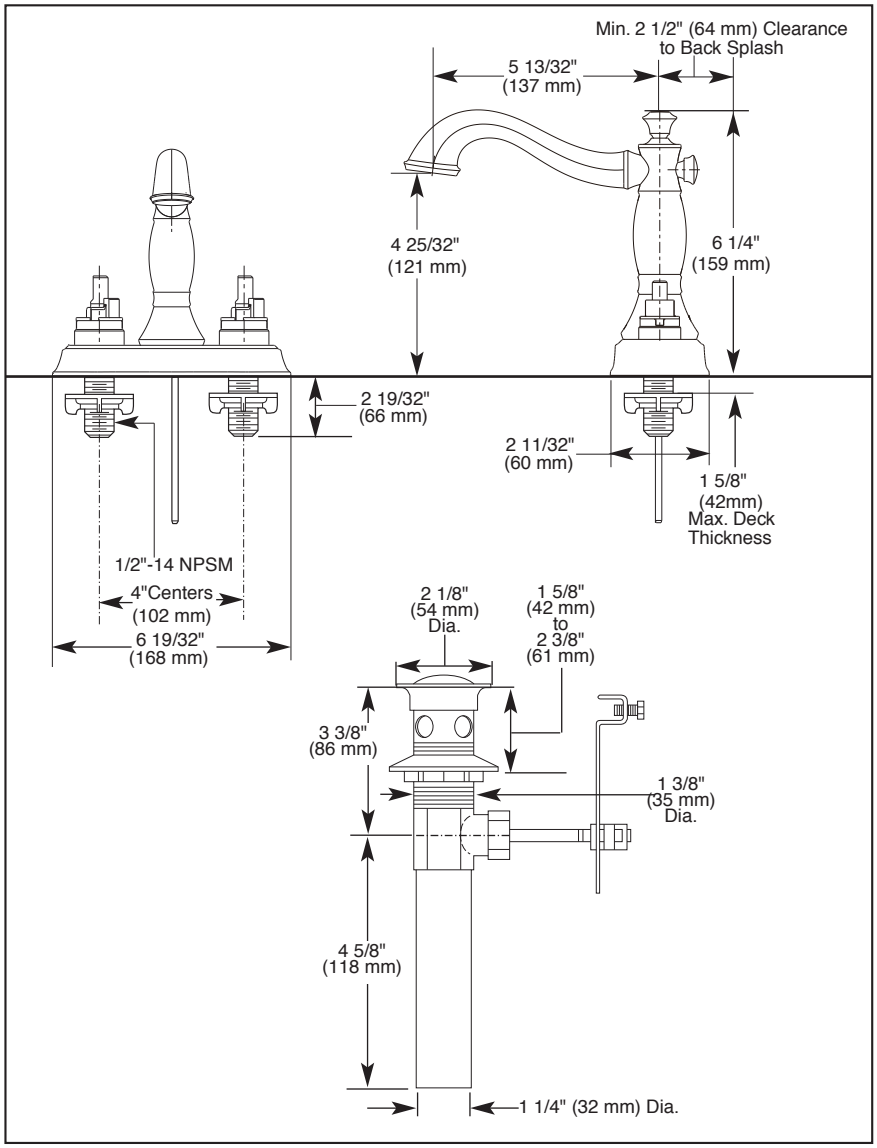

Available LHP Handle Options

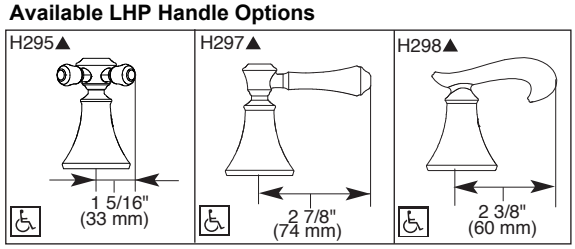

▲Designate proper finish suffix

Delta reserves the right (1) to make changes in specifications and materials, and (2) to change or discontinue models, both without notice or obligation. Dimensions are for reference only. See current full-line price book or www.deltafaucet.com for finish options and product availability.

DSP-L-2597LF-MPU-LHP Rev. E

LAVATORY FAUCETS

- Cassidy™ Series
- Two Handle Deck Mount

STANDARD SPECIFICATIONS:

- Maximum 1.20 gpm @ 60 psi, 4.54 L/min @ 414 kPa
- Solid brass fabricated body
- LHP - Less Handle Program. See handle options below.
- 1/4 turn handle stops
- Control mechanism is the rotating cylinder type with stainless steel plate and 90° rotation, with replaceable non-metallic seats.
- 1/2"-14 NPSM threaded male inlet shanks
- Models have metal drain with pop-up type fitting with plated flange and stopper

WARRANTY

- Lifetime limited warranty on parts (other than electronic parts and batteries) and finishes; or for commercial users, for 5 years from the date of purchase.
- 5 year limited warranty on electronic parts (other than batteries); or for commercial users, for 1 year from the date of purchase. No warranty is provided on batteries.

COMPLIES WITH:

- ASME A112.18.1 / CSA B125.1
- ASME A112.18.2 / CSA B125.2
- Indicates compliance to ICC/ANSI A117.1
- EPA WaterSense®
- Verified compliant with 0.25% weighted average Pb content regulations.

DELTA FAUCET COMPANY

55 E. 111th Street, Indianapolis, Indiana 46280
350 South Edgeware Road, St. Thomas, Ontario Canada N5P 4L1

© 2016 Masco Corporation of Indiana