WYATT®

24″ PEDESTAL LAVATORY

FEATURES

- Fine fire clay construction
- Transitional design with refined lines and controlled contours
- 8″ faucet spread
- Made in Turkey

DIMENSIONS

NOMINAL DIMENSIONS

24" x 19-11/16" x 36" (610 x 500 x 914 mm)
36″ (914 mm) to highest point on backsplash

BOWL INSIDE DIMENSIONS

16-5/16″ (414 mm) wide
12″ (305 mm) front to back
5-1/2″ (140 mm) depth

COLORS/FINISHES

Canvas White (415)

COMPONENTS

D20010008.415 Three Hole Lavatory
D21010000.415 Pedestal

COMPLIANCE CERTIFICATIONS

Meets or Exceeds ASME A112.19.2/CSA B45.1

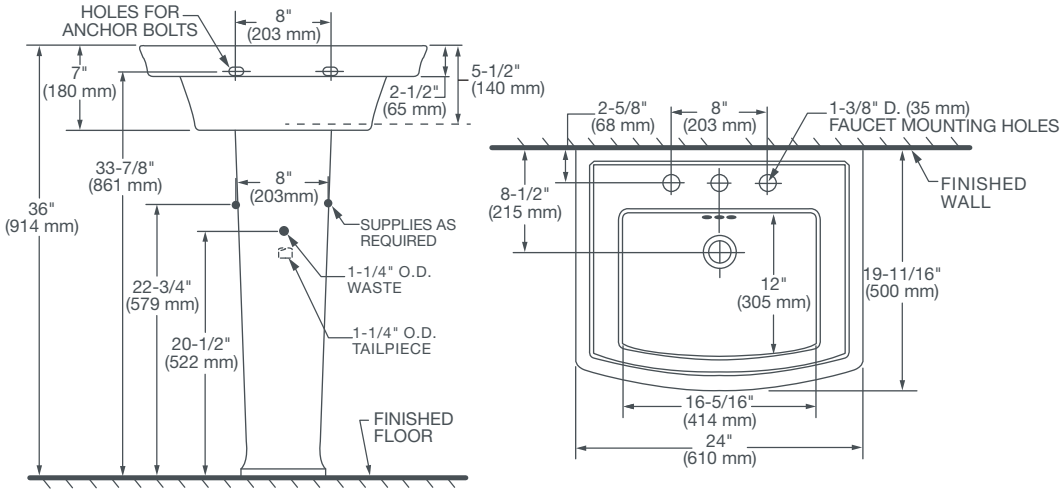

NOTES:

Dimensions shown for location supplies and "P" trap are suggested. Provide suitable reinforcement for all wall supports.
Slab/pedestal anchors and mounting features to be furnished by others.
Fittings not included with fixture and must be ordered separately.
Installation Instructions supplied with lavatory.

IMPORTANT:
Dimensions of fixtures are nominal and may vary within the range of tolerance established by ANSI standards.
These measurements are subject to change or cancellation. No responsibility is assumed for use of superseded or voided pages.

©2015 AS America Inc.