RAPID SL
DESIGN + ENGINEERING
GROHE GERMANY

99.0854.031/ÄM 240258/06.17

www.grohe.com

Pure Freude an Wasser

GROHE

38 749

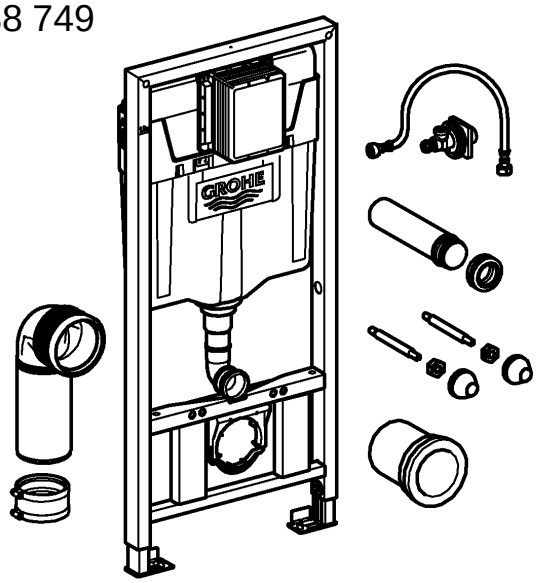

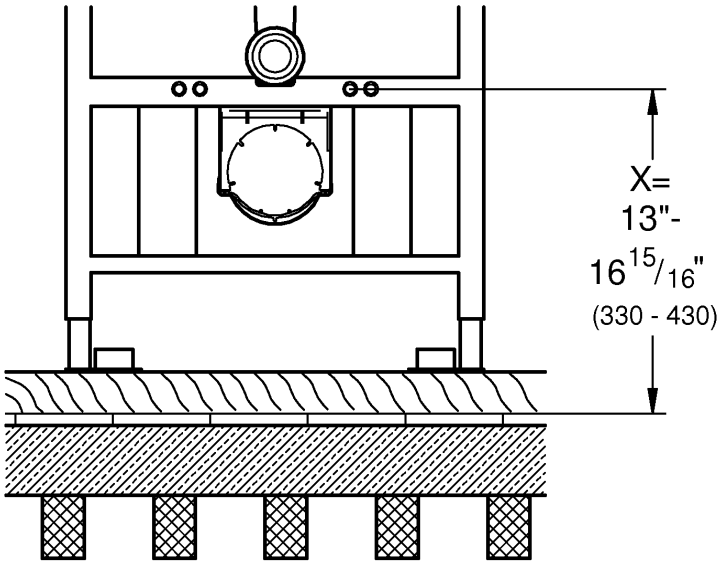

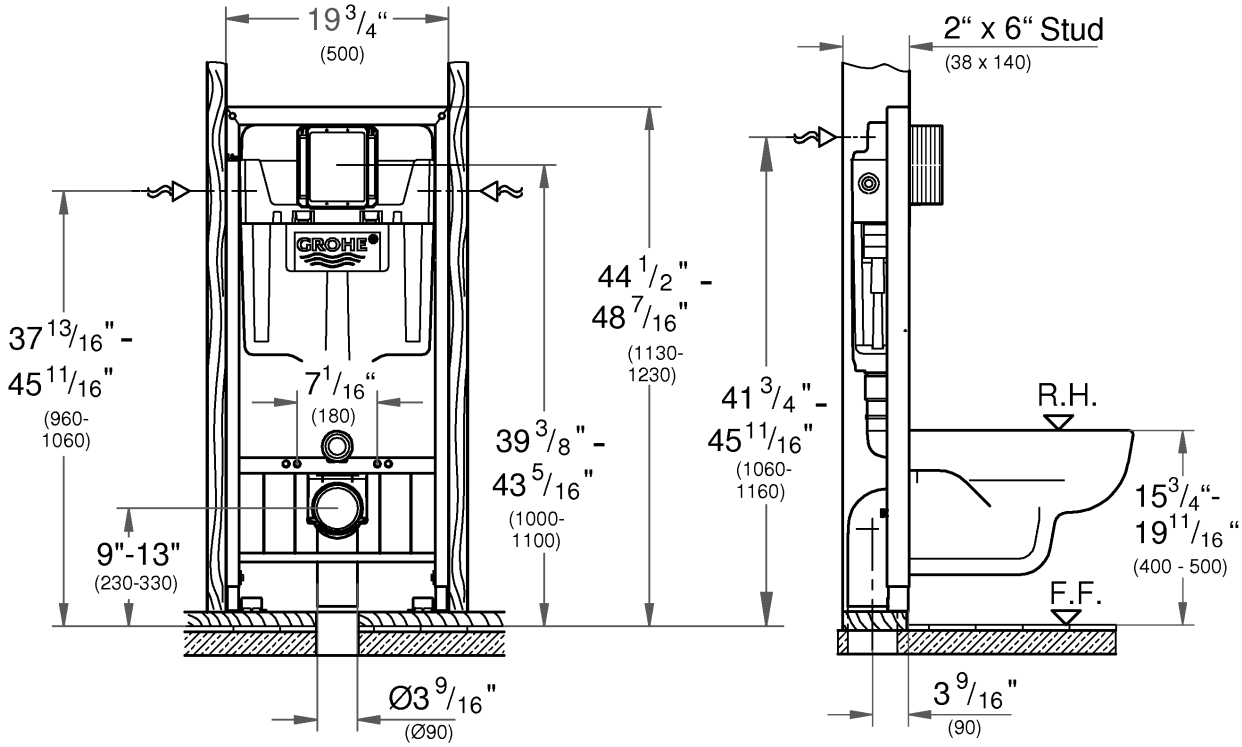

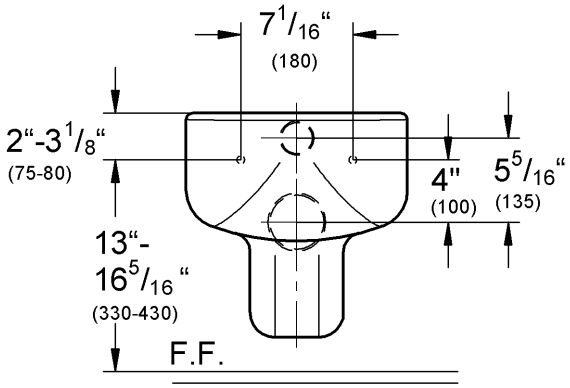

Concealed Tank and Carrier

The GROHE concealed water closet tank and carrier are adjustable for bowl rim height $15\frac{3}{4}$“ to $19\frac{11}{16}$“ to be used with an IAPMO listed 1.6 GPF wall hung bowl. Requires $\frac{1}{2}$“ water supply and 3“ nominal outlet.

In compliance with:
A 112.6.2

Note that some wall hung toiletts are delivered with their own mounting set wich should be used if possible.

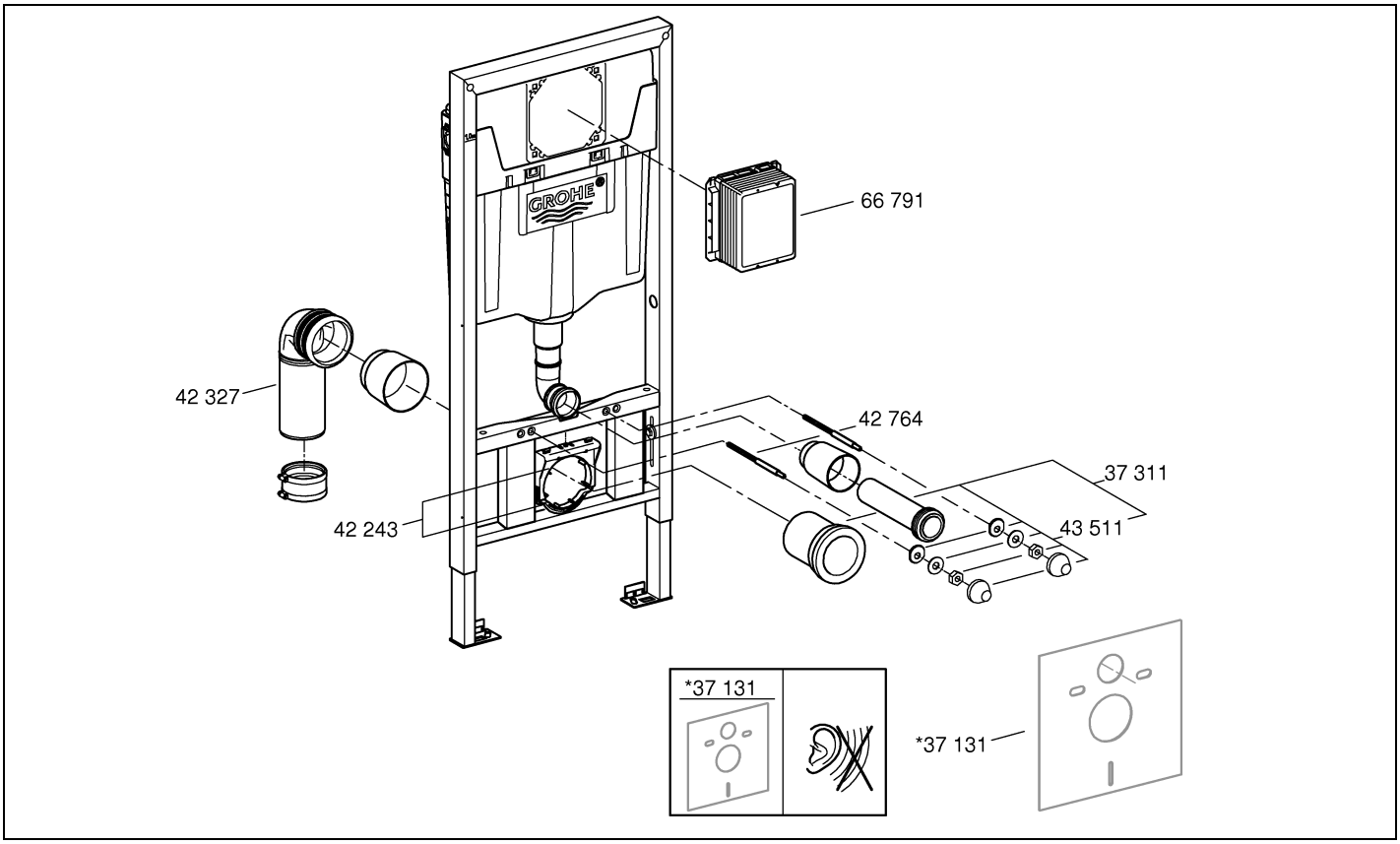

The tank and carrier are designed to fit within a 2“ x 6“ wood frame (or equal) construction. The studs must be placed 19 $^{11}/_{16}$“ apart at the location where the unit will be positioned prior to installation into the wall. The carrier legs must be adjusted for the finished rim height of the water closet bowl. The dimensions may be taken from the bowl or from the specification sheet. Be sure to allow for finished floor covering.

Finished rim height must be determined prior to installation.

NOTE: The 2“ x 6“ frame work must be affixed firmly to the floor and ceiling for a safe installation. An openig of $5^{1}/_{2}$“ x $7^{1}/_{2}$“ must be provided on finished wall for access into the tank and placement of actuator panel and panel frame.

STEP 1: Locate studs as specified, and secure with additional nails. Insure rough openings are proper, plumb, and square.

STEP 2: Position the carrier unit in the prepared opening. **The metal frame must be flush with the face of the surrounding studs** so that maximum support for the later applied drywall is accomplished. With the unit still in place, mark all anchor hole locations on hole plate and studs. Also mark the location for the 3“ DWV discharge pipe. At the same time indicate the position for the water supply, either from the top or rear into the tank.

1

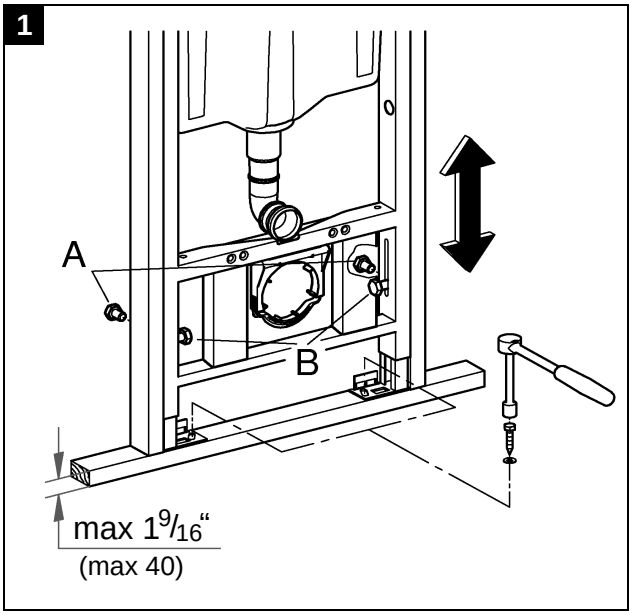

2

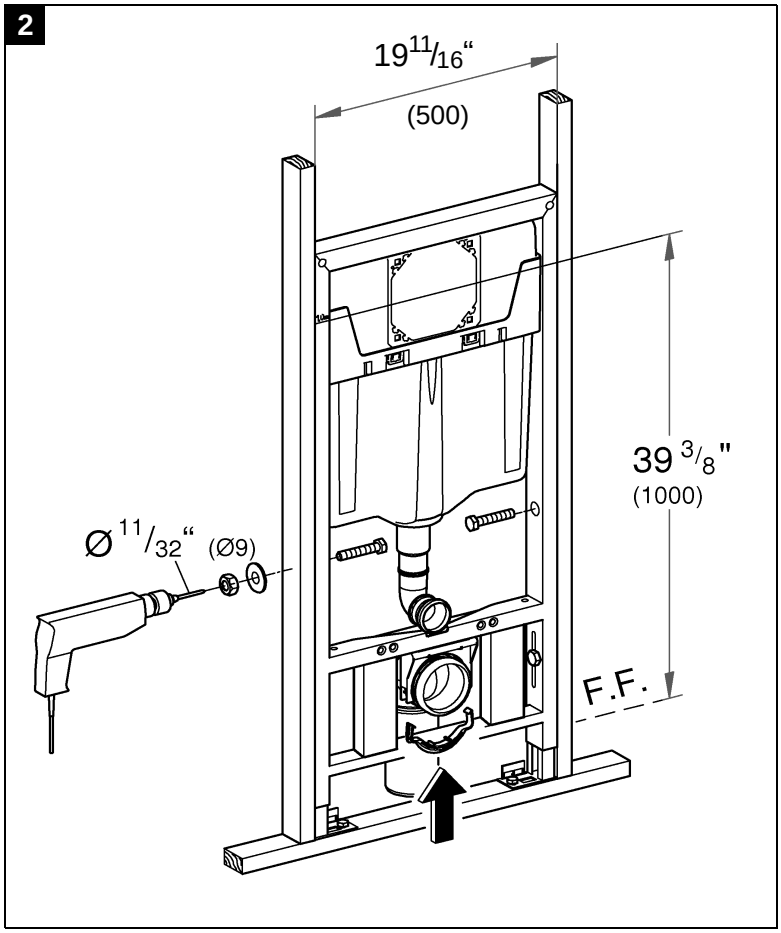

STEP 3:

Drill two (2) pilot holes ($^{3}/_{16}$“) for the supplied lag screws where marked on floor plate, see fig. [1]. Unscrew bolts (A, B) and pull out carrier unit from framework. Adapt framework to the hight of the floor structure and pull tight bolts (A), then bolts (B).

Also drill two bolt holes ($^{11}/_{32}$“) where marked on framework, see fig. [2] .

For the fixture discharge pipe bore a 4“ hole $3^{3}/_{8}$“ from front edge of plate to center through plate and floor.

STEP 4: Install 3“ DWV waste pipe through floor and connect to waste line (i.e. PVC, copper, cast iron).

STEP 5: Set carrier unit back in place into the wall frame and bolt in place with hardware provided.

STEP 6: Complete waste elbow connection with 3“ DWV flex coupling to waste line.

STEP 7: Remove the middle part of the cross bar. Install shutoff valve and mud guard in the tank opening.

3

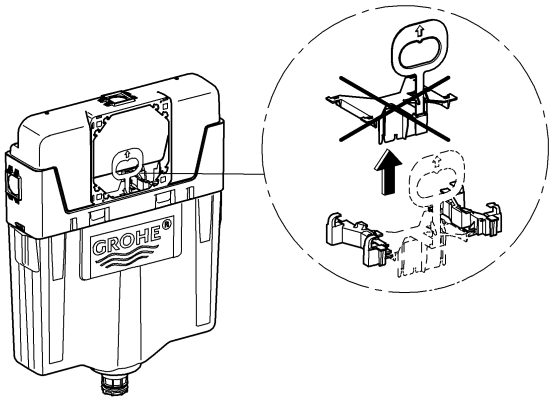

4

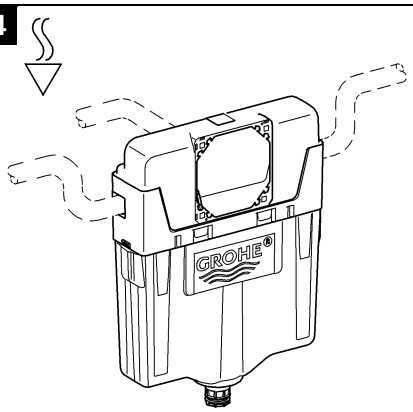

5

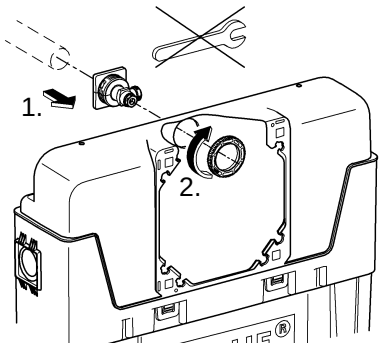

6

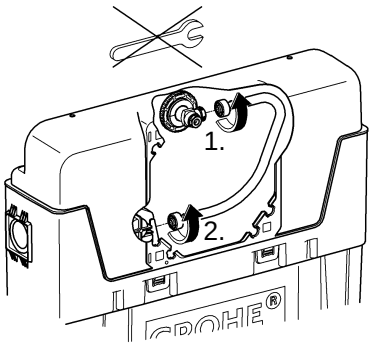

7

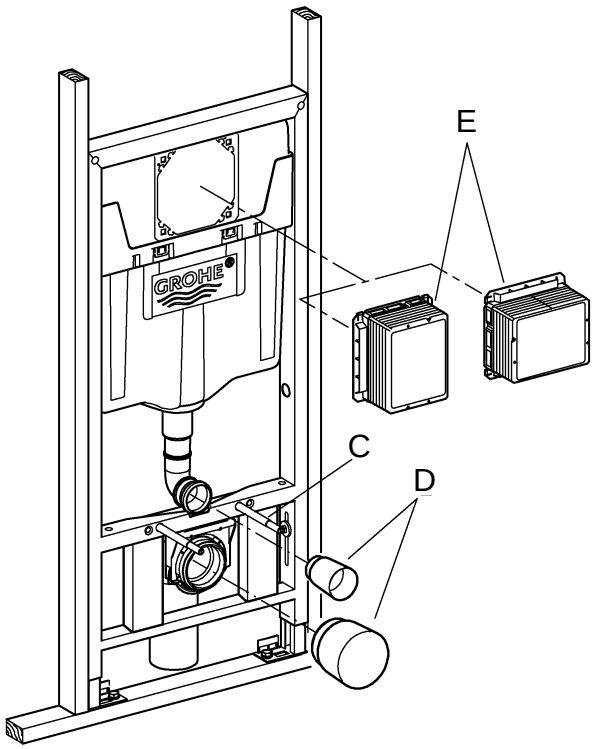

STEP 8: Install two $^{1}/_{2}$“ x 6“ fixture support rods with plastic sleeves (C), the pipe caps (D) and mud guard (E) are mounted for protection during wall surface construction, see fig. [7].

STEP 9: FiberBond wallboard, $^{1}/_{2}$“ tile backer board or plywood with a ceramic tile surface would be most suitable materials recommended for wall finish in order to support the wall hung toilet bowl. Holes in wallboard for ceramic bolts must be 1“ (25).

8

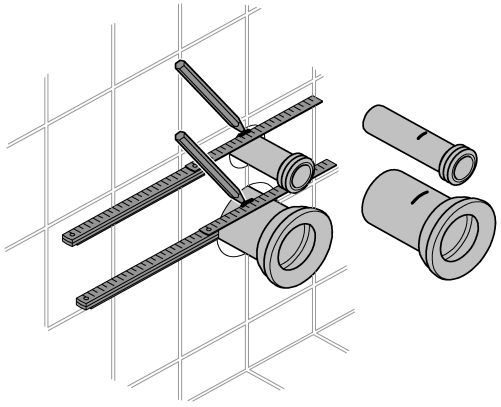

9

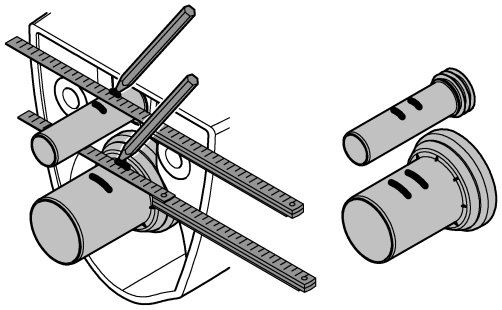

10

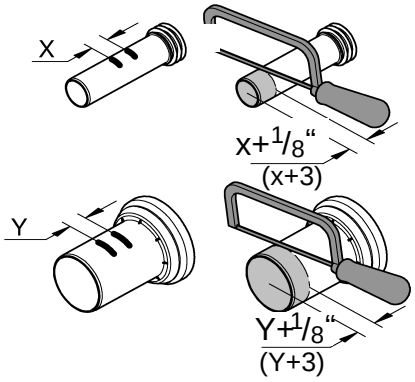

11

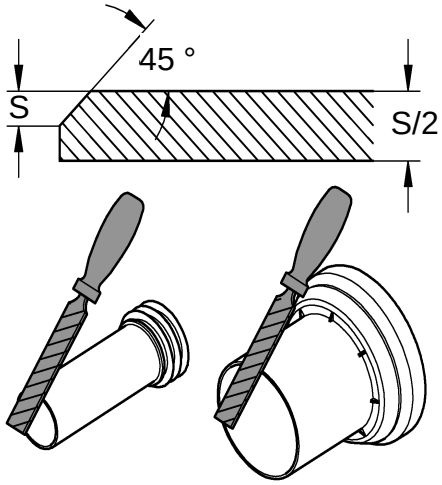

12

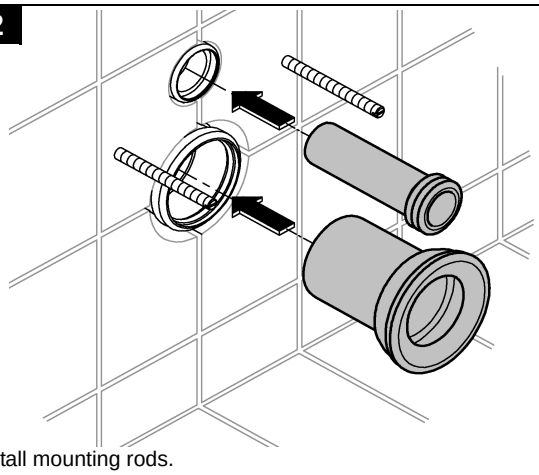

Install mounting rods.
Determine finished length.

13

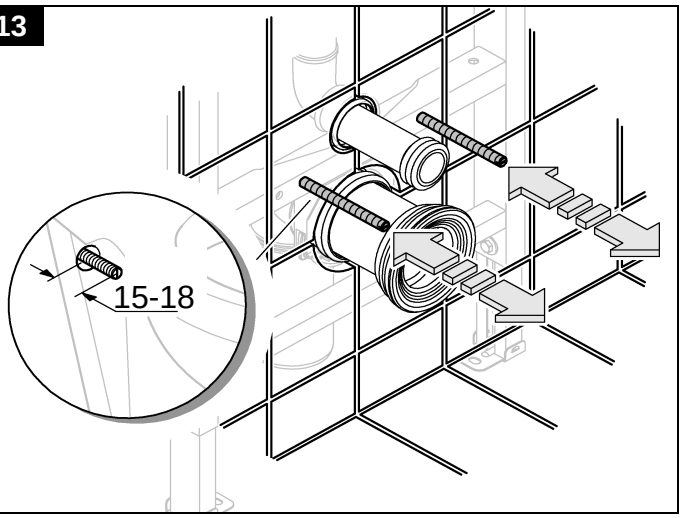

14

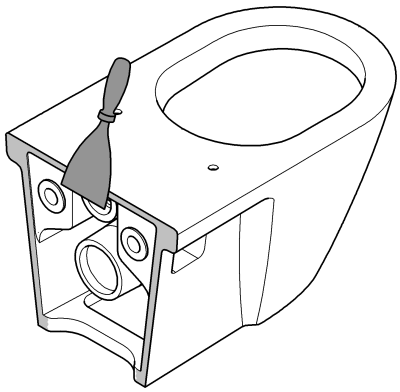

Apply mastic or sealant to backside of bowl.

15

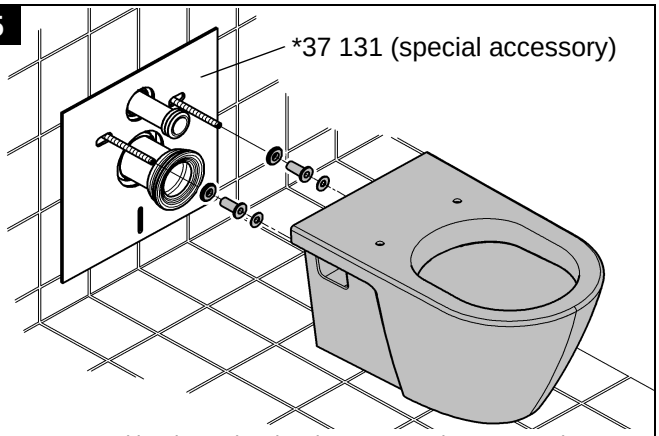

NOTE: Sound barrier pad optional seperate order requested.

16

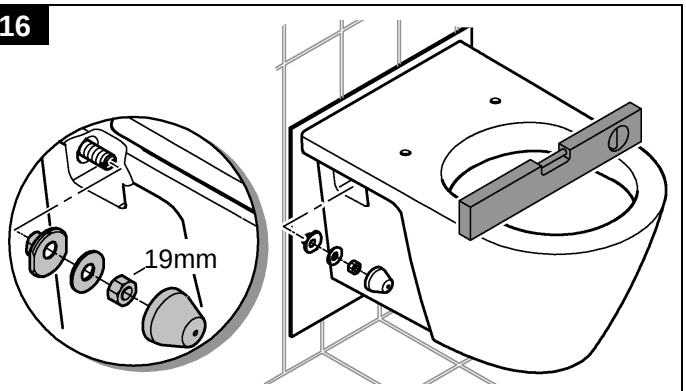

Place bowl onto rods. Attach cap retainers, washers and nuts on both sides loosely. Level side to side. Tighten nuts. DO NOT OVER TIGHTEN. Snap caps over retainers.

17

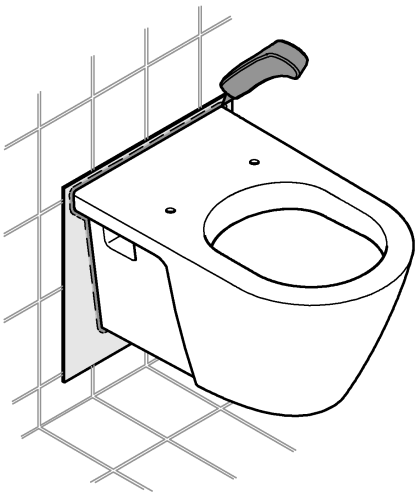

18

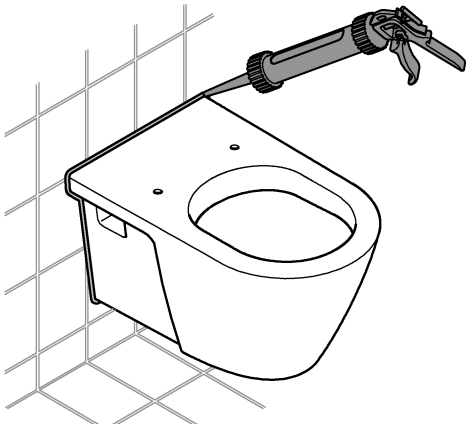

Seal around bowl with waterproof flexible sealant.

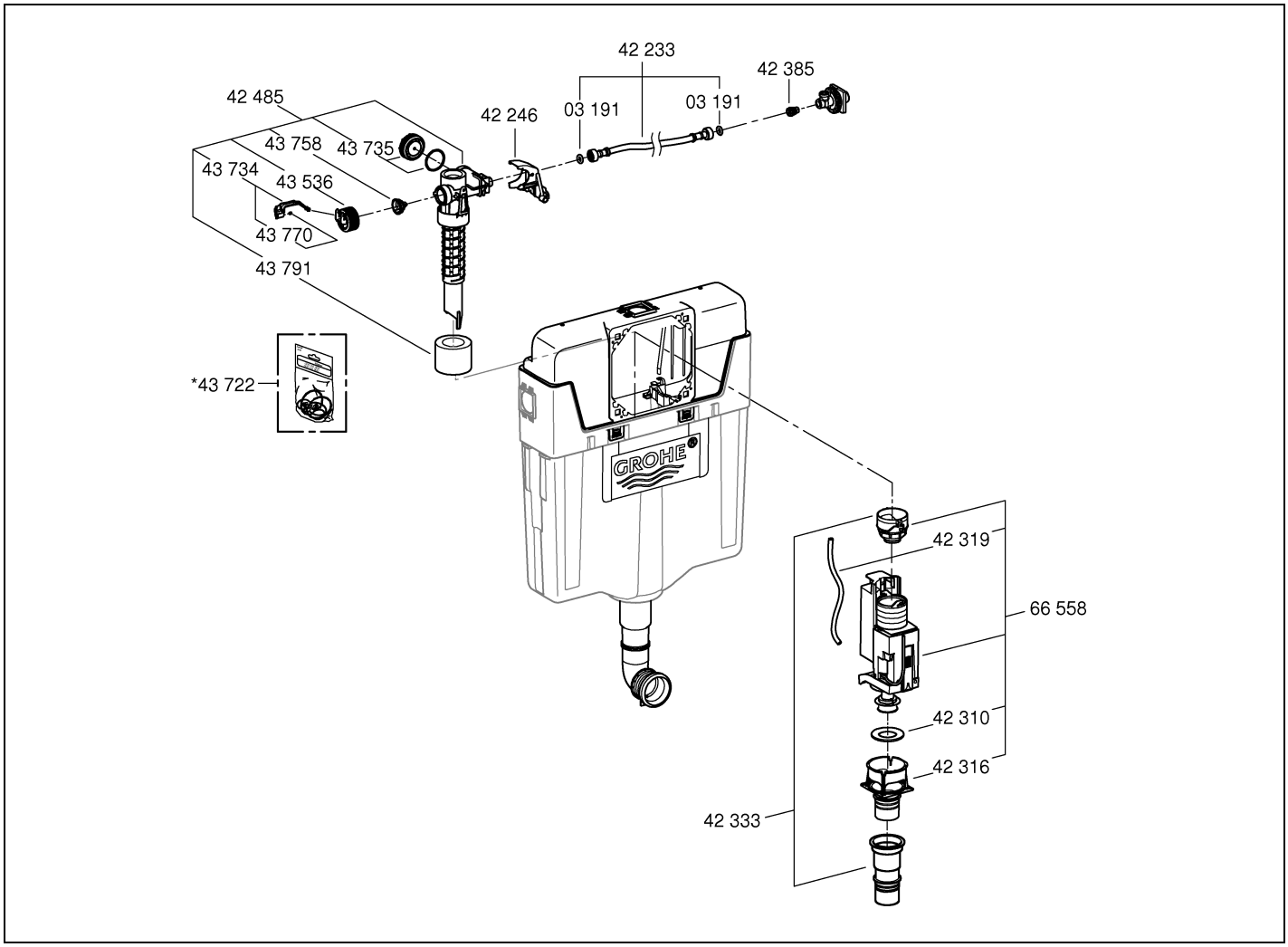
42 233
42 385
42 485
42 246
03 191
03 191
43 758
43 735
43 734
43 536
43 770
43 791
*43 722
GROHE
42 319
66 558
42 310
42 316
42 333

19

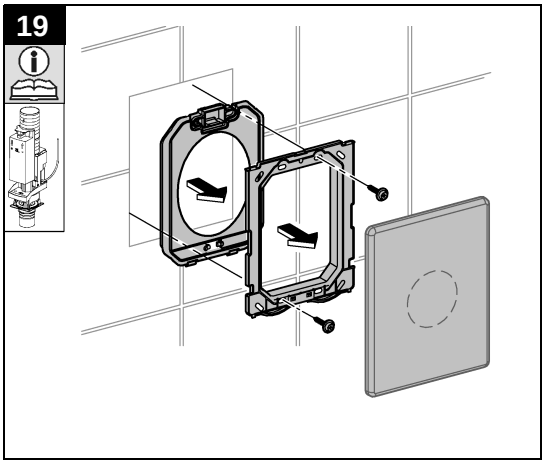

20

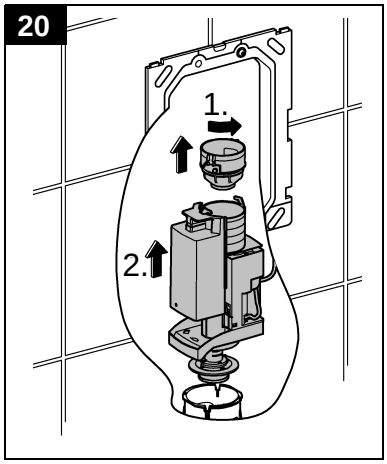
1.
2.

21

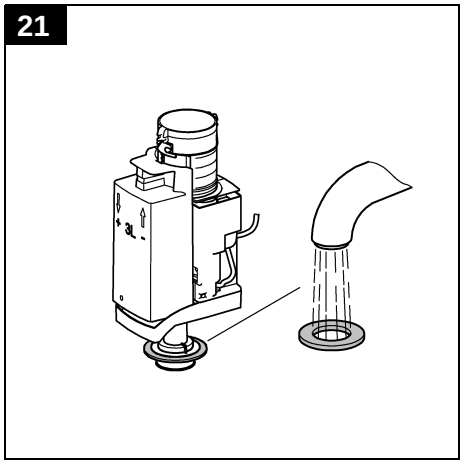

22

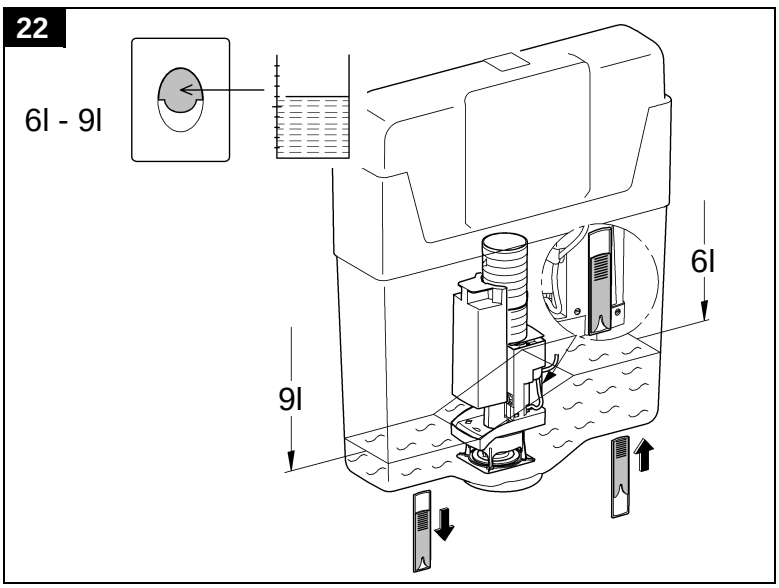
6l - 9l
6l
9l

23

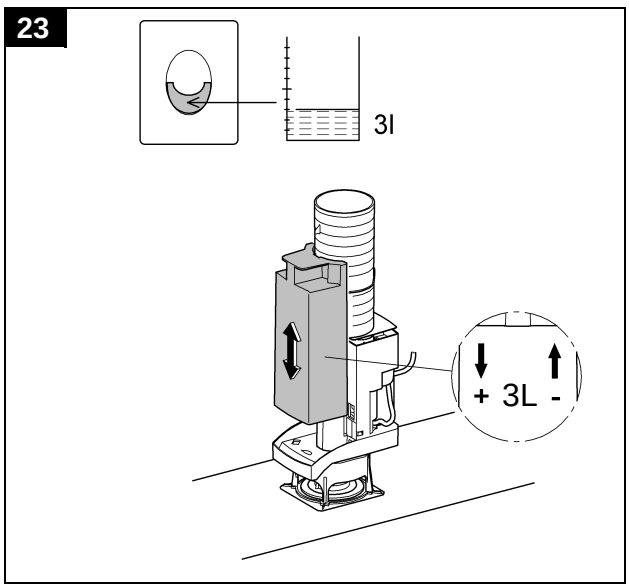
3l
+ 3L -

24

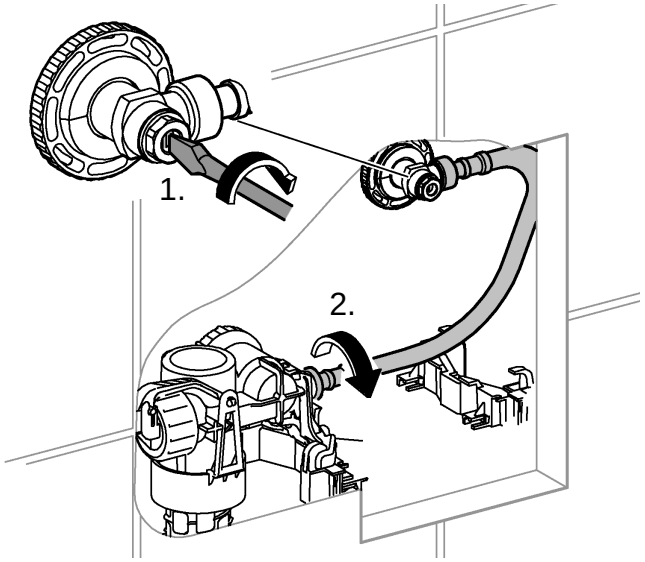

25

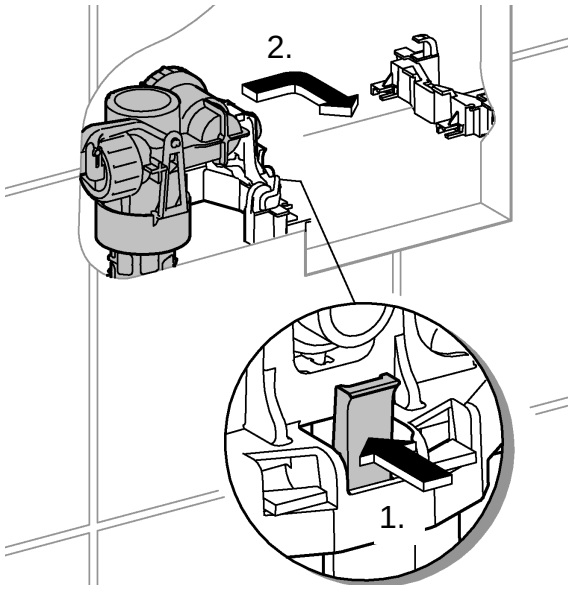

26

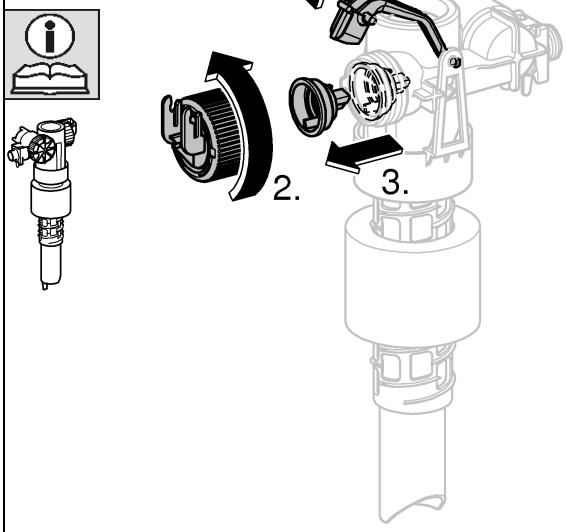

27

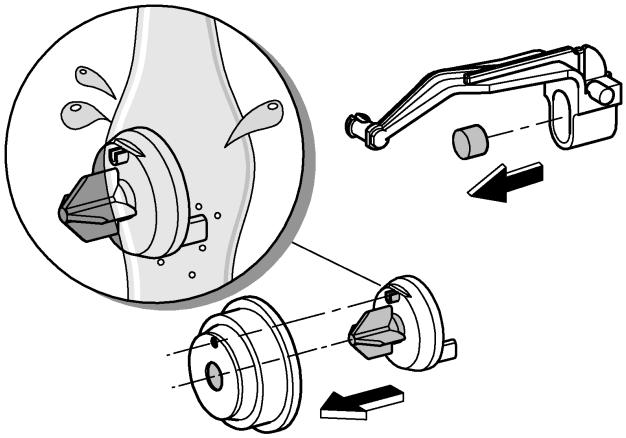

28

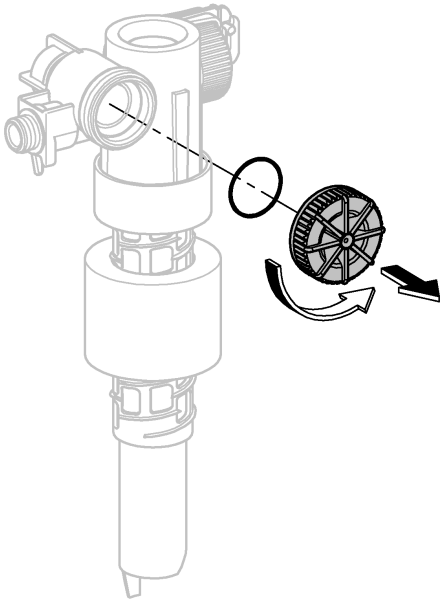

29

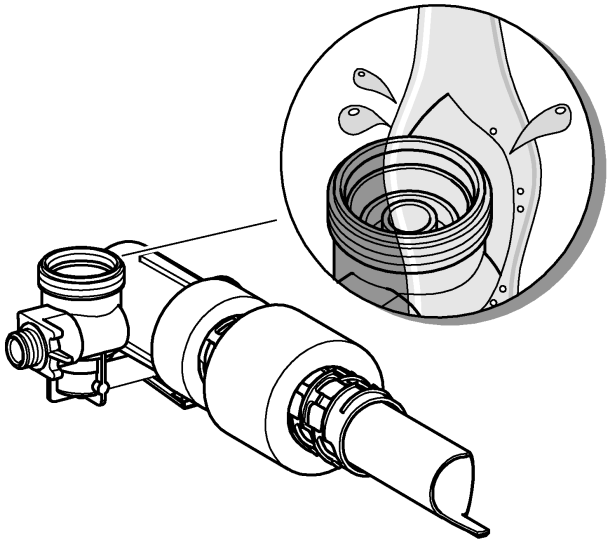

LIMITED WARRANTY

Flushing System Products: GROHE provides the following warranties on its flushing system products to the original purchaser, installed in a residential application. Flushing system products must be installed in accordance with local plumbing codes; GROHE does not extend this warranty to (nor implies) local code compliance.

A Limited Lifetime Warranty is provided on the carrier and tank shell to be free from manufacturing defects in materials and workmanship under normal use for as long as the original purchaser owns their home.

A Ten-Year Limited Warranty is provided on the flushing mechanism (fill and discharge valves) to be free from manufacturing defects in materials and workmanship under normal use for as long as the original purchaser owns their home.

At its option, GROHE will repair or replace any part that proves to be defective in material and/or workmanship under normal installation, use and service.

To obtain warranty repair or replacement the faulty part or product is to be sent along with proof-of-purchase (original sales receipt) from the original consumer purchaser to:

✆ +1 800 4447643
us-customerservice@grohe.com

This warranty is extended to the original consumer owner, but does not cover installation or any other labor charges and shall not apply to any products or parts of products which have been:

a) Repaired by unqualified persons or not using original GROHE spare parts or altered in any manner unless previously authorized in writing by GROHE; or

b) Damaged as a result of misuse, negligence, accident or faulty installation or maintenance; or

c) Installed or used in a manner contrary to GROHE's printed instructions; or

d) Damaged by the effects of dirt, limescale or aggressive cleaners.

This is the exclusive warranty by GROHE, which does not make any other warranty of any kind, including the implied warranty of merchantability.

This warranty excludes all industrial, commercial, and business usage whose purchasers are extended a one (1) year limited warranty from the date of purchase, with all other terms of this warranty. (See following for commercial products.)

Commercial Products: Grohe warrants its products installed in a commercial application to be free from manufacturing defects for a period of one (1) year from the date of acquisition by original owner. Replaced products or parts are warranted only for the period remaining under the initial warranty.

THIS WARRANTY IS LIMITED SOLELY TO THE ABOVE AND THIS WARRANTY AND ANY WARRANTIES IMPLIED BY STATE LAW WILL APPLY ONLY FOR THE APPLICABLE WARRANTY PERIOD SPECIFIED HEREIN. ALSO, GROHE WILL NOT BE LIABLE FOR ANY LOSS, DAMAGE, EXPENSE OR INCIDENTAL OR CONSEQUENTIAL DAMAGES OF ANY KIND, WHETHER BASED ON WARRANTY, CONTRACT OR NEGLIGENCE AND ARISING IN CONNECTION WITH THE SALE, USE OR REPAIR OF THE PRODUCT. SOME STATES DO NOT ALLOW THE EXCLUSION OR LIMITATION OF CONSEQUENTIAL DAMAGE OR
LIMITATIONS ON HOW LONG AN IMPLIED WARRANTY LASTS, SO THE ABOVE LIMITATIONS OR EXCLUSIONS MAY NOT APPLY. THIS WARRANTY GIVES YOU SPECIFIC LEGAL RIGHTS, AND YOU MAY ALSO HAVE OTHER RIGHTS WHICH VARY FROM STATE TO STATE. UNLESS OTHERWISE CONTRARY TO STATE LAW GOVERNING THE PURCHASE, GROHE'S
LIABILITY WILL NOT EXCEED THE CONTRACT PRICE FOR THE PRODUCT CLAIMED TO BE DEFECTIVE OR UNSUITABLE.

Pure Freude an Wasser

GROHE

D
& +49 571 3989 333
helpline@grohe.de

A
& +43 1 68060
info-at@grohe.com

AUS
& +(61) 1300 54945
grohe_australia@lixil.com

B
& +32 16 230660
info.be@grohe.com

BG
& +359 2 9719959
grohe-bulgaria@grohe.com

BR
& 0800 770 1222
falecom@grohe.com

CAU
& +99 412 497 09 74
info-az@grohe.com

CDN
& +1 888 6447643
info@grohe.ca

CH
& +41 44 877 73 00
info@grohe.ch

CN
& +86 4008811698
info.cn@grohe.com

CY
& +357 22 465200
info@grome.com

CZ
& +358 942 451 390
grohe-cz@grohe.com

DK
& +45 44 656800
grohe@grohe.fi

E
& +34 93 3368850
grohe@grohe.es

EST
& +372 6616354
grohe@grohe.ee

F
& +33 1 49972900
sav-fr@grohe.com

FIN
& +358 942 451 390
grohe@grohe.fi

GB
& +44 871 200 3414
info-uk@grohe.com

GR
& +30 210 2712908
nsapountzis@ath.forthnet.gr

H
& +36 1 2388045
info-hu@grohe.com

HK
& +852 2969 7067
info@grohe.hk

I
& +39 2 959401
info-it@grohe.com

IND
& +91 1800 102 4475
customercare.in@grohe.com

IS
& +354 515 4000
jonst@byko.is

J
& +81 3 32989730
info@grohe.co.jp

KZ
& +7 727 311 07 39
info-cac@grohe.com

LT
& +372 6616354
grohe@grohe.ee

LV
& +372 6616354
grohe@grohe.ee

MAL
info-malaysia@grohe.com

MX
& 01800 8391200
pregunta@grohe.com

N
& +47 22 072070
grohe@grohe.no

NL
& +31 79 3680133
vragen-nl@grohe.com

NZ
technicalenquiries@
patersontrading.co.nz

P
& +351 234 529620
commercial-pt@grohe.com

PL
& +48 22 5432640
biuro@grohe.com.pl

RI
& 0-800-1-046743
customercare-
indonesia@asia.lixil.com

RO
& +40 21 2125050
info-ro@grohe.com

ROK
& +82 2 1588 5903
info-singapore@grohe.com

RP
& +63 2 8938681

RUS
& +7 495 9819510
info@grohe.ru

S
& +46 771 141314
grohe@grohe.se

SGP
& +65 6311 3611
info-singapore@grohe.com

SK
& +420 277 004 190
grohe-cz@grohe.com

T
& +66 21681368
(Haco Group)
info@haco.co.th

TR
& +90 216 441 23 70
GroheTurkey@grome.com

UA
& +38 44 5375273
info-ua@grohe.com

USA
& +1 800 4447643
us-customerservice@grohe.com

VN
& +84 90 9694768
& +84 90 9375068
info-vietnam@grohe.com

AL **BiH** **HR** **KS**
ME **MK** **SLO** **SRB**
& +385 1 2911470
adria-hr@grohe.com

Eastern Mediterranean,
Middle East - Africa
Area Sales Office:
& +357 22 465200
info@grome.com

IR **OM** **UAE** **YEM**
& +971 4 3318070
grohedubai@grome.com

Far East Area Sales Office:
& +65 6311 3600
info@grohe.com.sg

Latin America:
& +52 818 3050626
pregunta@grohe.com

www.grohe.com

2016/09/28