KIT#323 trim

TKIT#323RUTM



cUPC®

Specifications

Composition

- TRUTM23C - 2-way Type T/P coaxial valve trim
- 4664C - Hand shower rail
- 468C - 20 cm (8") shower head
- 503C - 40 cm (16") shower arm
- 775C - Elbow supply

Available colors

- C : Chrome
- PN : Polished Nickel (PVD)

Certifications

- CSA B125.1
- ASME A112.18.1
- ASSE 1016
- CMR248 Approval

Warranty

This **Riobel Inc.** product you have purchased carries a Limited Lifetime Warranty on the chrome, PVD finish, blacks and all working parts and is guaranteed from the initial purchase date against all manufacturing defects. All other finishes, including plastic components, are guaranteed for one year. All electric and/or electronic parts are covered by a 5-year limited warranty.

Customer Service

Ontario, West Canada : 888-287-5354 Quebec, Maritimes, United States : 866-473-8442

2020.11.07

TKIT323RUTM_2020.11.07

2-way Type T/P coaxial valve trim

TRUTM23



Specifications

Descriptions

- 4 positions (OFF, 1, 1 and 2, 2) share
- Thermostatic/pressure balance coaxial cartridge with check valves
- R23, R23-SPEX or R23-EX rough required to complete
- Trim only

Available colors

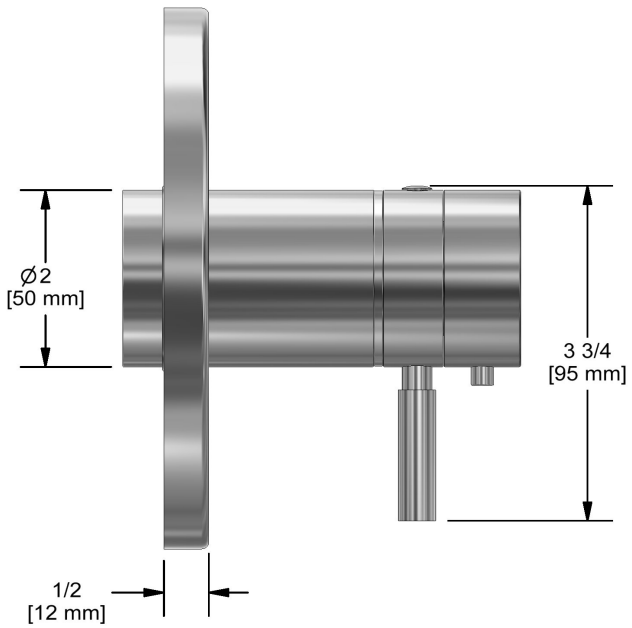
- C : Chrome
- PN : Polished Nickel (PVD)

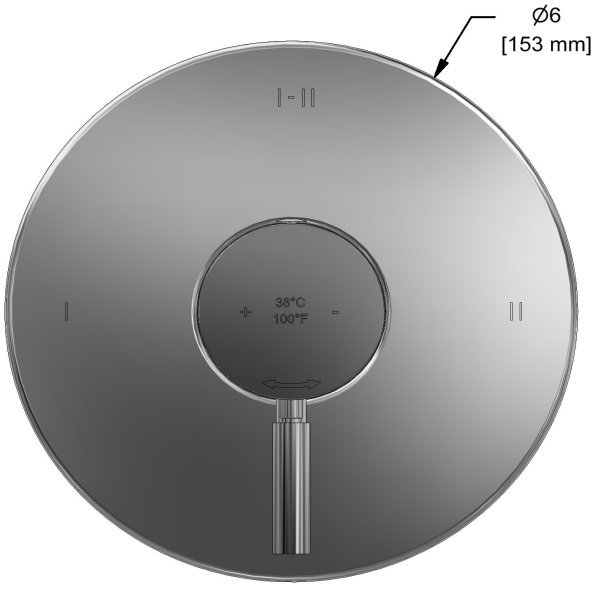
Available flow

- 24 L/min, 6.3 gpm (US) 60psi

Certifications

- CSA B125.1
- ASME A112.18.1
- ASSE 1016
- CMR248 Approval
- ADA





Sizes, models and finishes may differ from thoses presented.

Warranty

This **Riobel Inc.** product you have purchased carries a Limited Lifetime Warranty on the chrome, PVD finish, blacks and all working parts and is guaranteed from the initial purchase date against all manufacturing defects. All other finishes, including plastic components, are guaranteed for one year. All electric and/or electronic parts are covered by a 5-year limited warranty.

Customer Service

Ontario, West Canada : 888-287-5354 Quebec, Maritimes, United States : 866-473-8442

2020.11.07

TRUTM23_2020.11.07

Hand shower rail

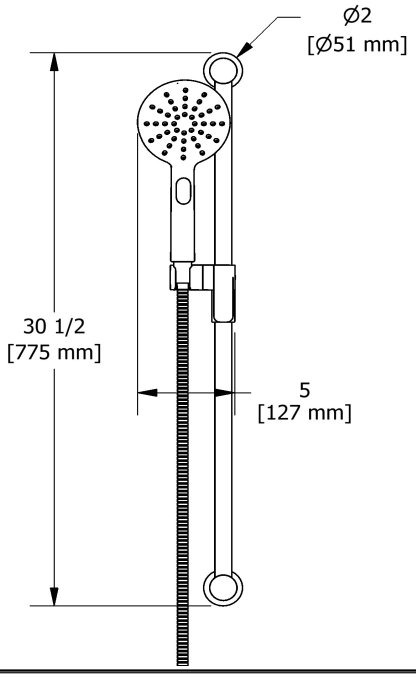
4664

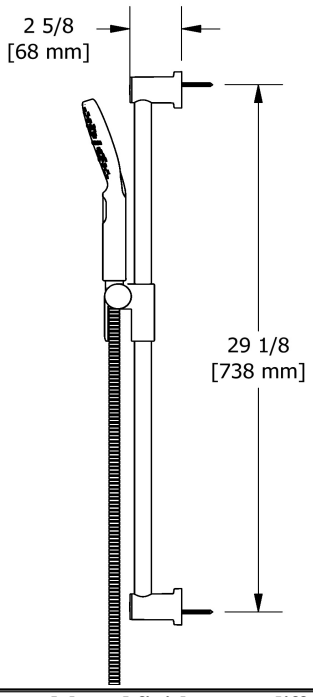
Specifications

Descriptions

- Ø22 mm (7/8") slide bar
- Easy-Glide left cursor
- 4364, 2-jet hand shower
- Scale-free
- 150 cm (59") double interlock flexible hose, swivel and 2 check valves







Sizes, models and finishes may differ from thoses presented.

Warranty

This **Riobel Inc.** product you have purchased carries a Limited Lifetime Warranty on the chrome, PVD finish, blacks and all working parts and is guaranteed from the initial purchase date against all manufacturing defects. All other finishes, including plastic components, are guaranteed for one year. All electric and/or electronic parts are covered by a 5-year limited warranty.

Customer Service

Ontario, West Canada : 888-287-5354 Quebec, Maritimes, United States : 866-473-8442

2020.11.07

4664_SPEC_2020-11-07

20 cm (8") shower head

468



Specifications

Descriptions

- Scale-free
- G½" inlet female
- Swivel

Available colors

- C : Chrome
- BN : Brushed Nickel (PVD)
- PN : Polished Nickel (PVD)

Available flows

- 7.6 L/min, 2.0 gpm (US) 60psi
- 5.69 L/min, 1.5 gpm (US) 60psi (**468-15**)
- 6.6L/min, 1.75 gpm (US) 60psi (**468-WS**) *

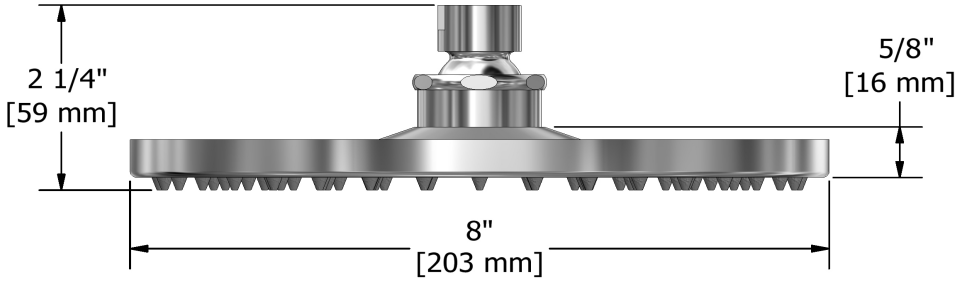
EPA certification applicable to the indicated model only

Certifications

- CSA B125.1
- ASME A112.18.1
- CMR248 Approval

* WaterSense Meets EPA Criteria Certified by IAPMO R&T

cUPC®



Sizes, models and finishes may differ from thoses presented.

Warranty

This **Riobel Inc.** product you have purchased carries a Limited Lifetime Warranty on the chrome, PVD finish, blacks and all working parts and is guaranteed from the initial purchase date against all manufacturing defects. All other finishes, including plastic components, are guaranteed for one year. All electric and/or electronic parts are covered by a 5-year limited warranty.

Customer Service

Ontario, West Canada : 888-287-5354 Quebec, Maritimes, United States : 866-473-8442

2020.11.07

468 (2020-11-07) 2946_SPEC_2946999999 999999

40 cm (16") shower arm

503

Specifications

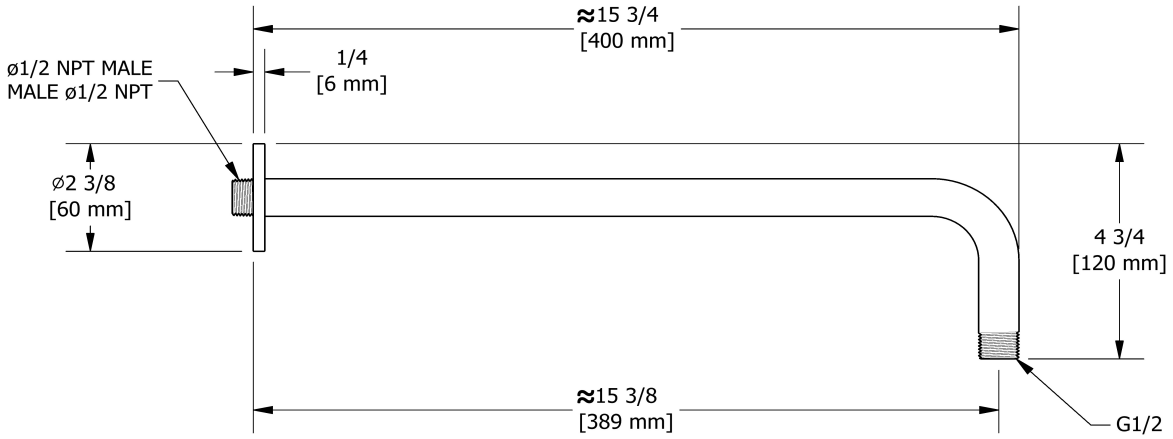
Descriptions

- ½" inlet male NPT
- Round flange

Available colors

- C : Chrome
- BN : Brushed Nickel (PVD)
- PN : Polished Nickel (PVD)





Sizes, models and finishes may differ from thoses presented.

Warranty

This **Riobel Inc.** product you have purchased carries a Limited Lifetime Warranty on the chrome, PVD finish, blacks and all working parts and is guaranteed from the initial purchase date against all manufacturing defects. All other finishes, including plastic components, are guaranteed for one year. All electric and/or electronic parts are covered by a 5-year limited warranty.

Customer Service

Ontario, West Canada : 888-287-5354 Quebec, Maritimes, United States : 866-473-8442

2020.11.07

503 (10/12/21) 2946_SPEC_2946999999 999999

Elbow supply

775

Specifications

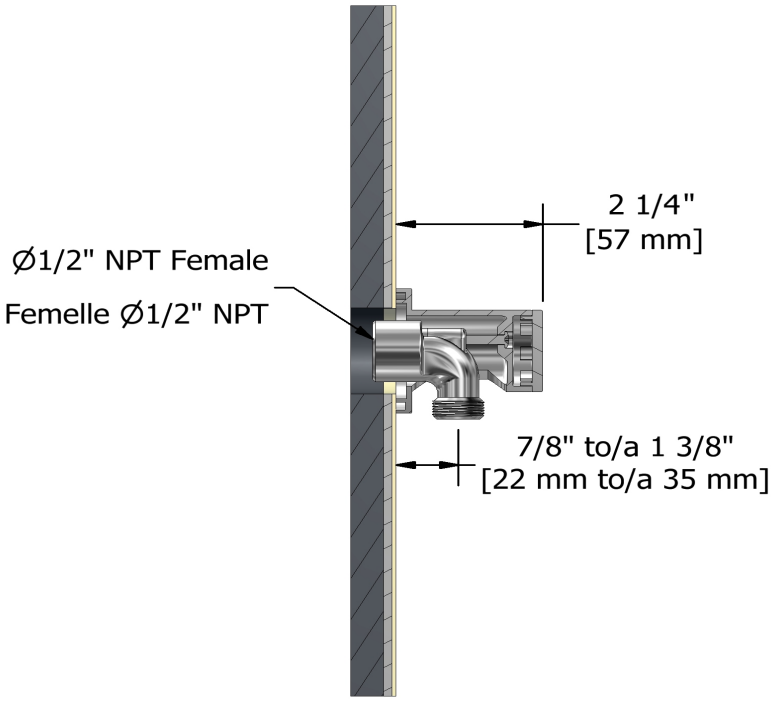
Descriptions

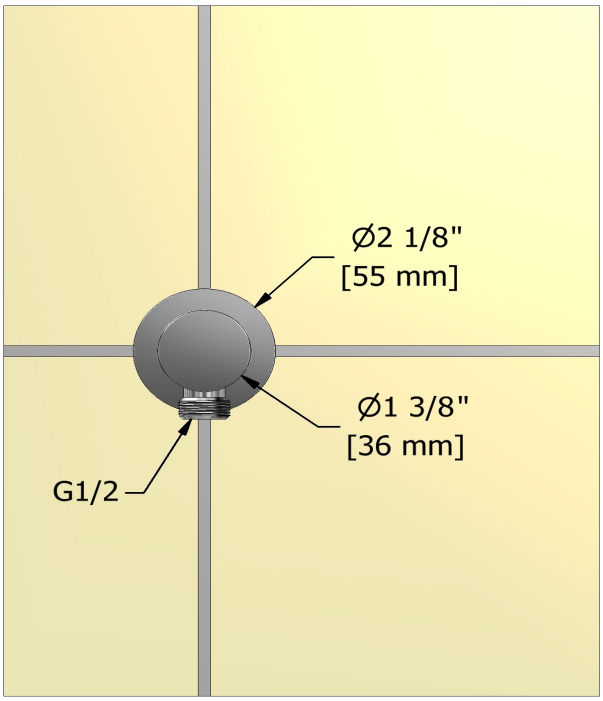
- ½" outlet male
- Adjustable depth
- ½" inlet female NPT

Available colors

- C : Chrome
- BN : Brushed Nickel (PVD)
- PN : Polished Nickel (PVD)







Sizes, models and finishes may differ from thoses presented.

Warranty

This **Riobel Inc.** product you have purchased carries a Limited Lifetime Warranty on the chrome, PVD finish, blacks and all working parts and is guaranteed from the initial purchase date against all manufacturing defects. All other finishes, including plastic components, are guaranteed for one year. All electric and/or electronic parts are covered by a 5-year limited warranty.

Customer Service

Ontario, West Canada : 888-287-5354 Quebec, Maritimes, United States : 866-473-8442

2020.11.07

775C,2PC 7946666666 10/12/2021 8:28:28 AM