AXOR Montreux
2-handle basin mixer 220 with pop-up waste set
Surfaces: **chrome** Article Number: **16510000**

Description

product features

- ComfortZone 220
- projection 175 mm
- normal spray
- flow rate: 5 l/min
- ceramic valves hot/ cold 90°
- pop-up waste set G 1¼
- suitable for continuous flow water heaters
- swivel range 120°
- connection dimension: DN15

Technology

Product image

Scale drawing

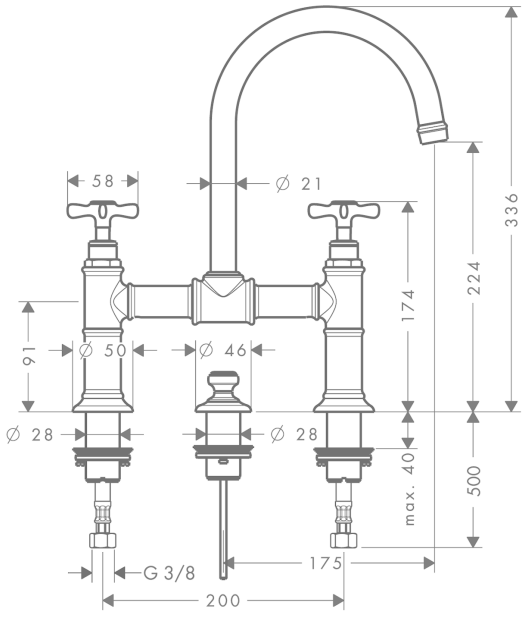
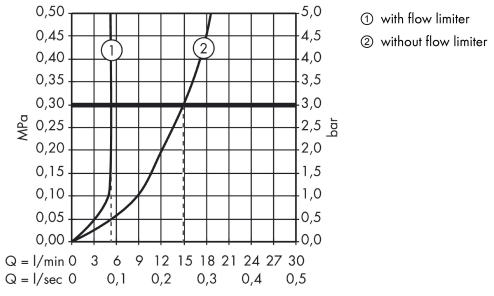
Flowchart