MOEN

Buy it for looks. Buy it for life.®

Specifications

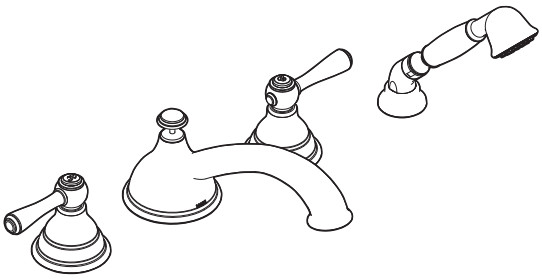

KINGSLEY™ DECK MOUNT
Two-Handle Roman Tub Faucet Trim w/Built In Diverter Valve

Models: T912 series

Valves: 9792, 9793, 9796, 9797

DESCRIPTION
- Metal construction with various finishes identified by suffix
- Includes hot and cold temperature indicators
- Single function handshower with double check valves

OPERATION
- Lever style handles
- Rotate hot side handle counterclockwise to open (clockwise to close)
- Rotate cold side handle clockwise to open (counterclockwise to close)

FLOW
- Hand shower meets 2.0 gpm max (7.6 L/min) @ 80 psi

STANDARDS
- Third party certified to ASME A112.18.1M/CSA B-125.1 and all applicable requirements referenced therein
- **ADA** for lever handles

WARRANTY
- Lifetime limited warranty against leaks, drips and finish defects to the original consumer purchaser
- 5 year warranty if used in commercial installations

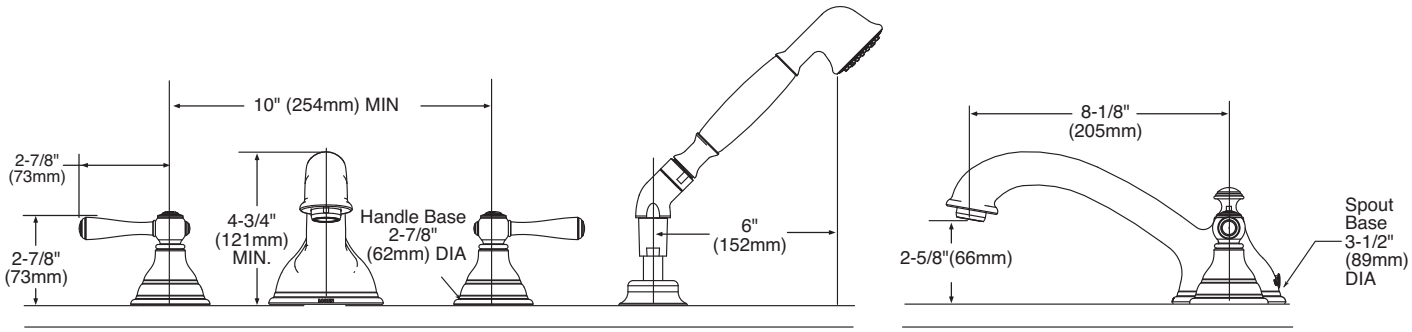

CRITICAL DIMENSIONS

(DO NOT SCALE)