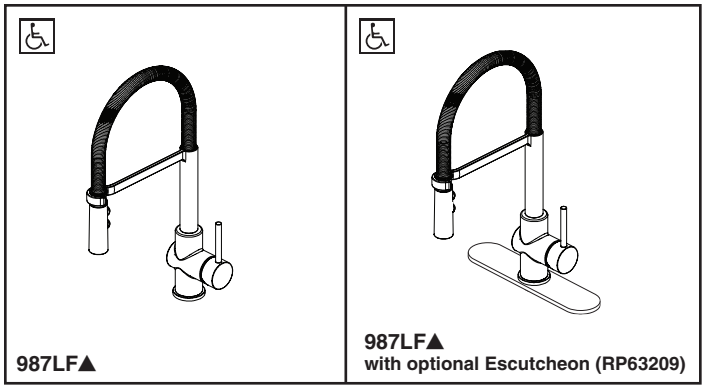

Submitted Model No.:_____

Specific Features:_____

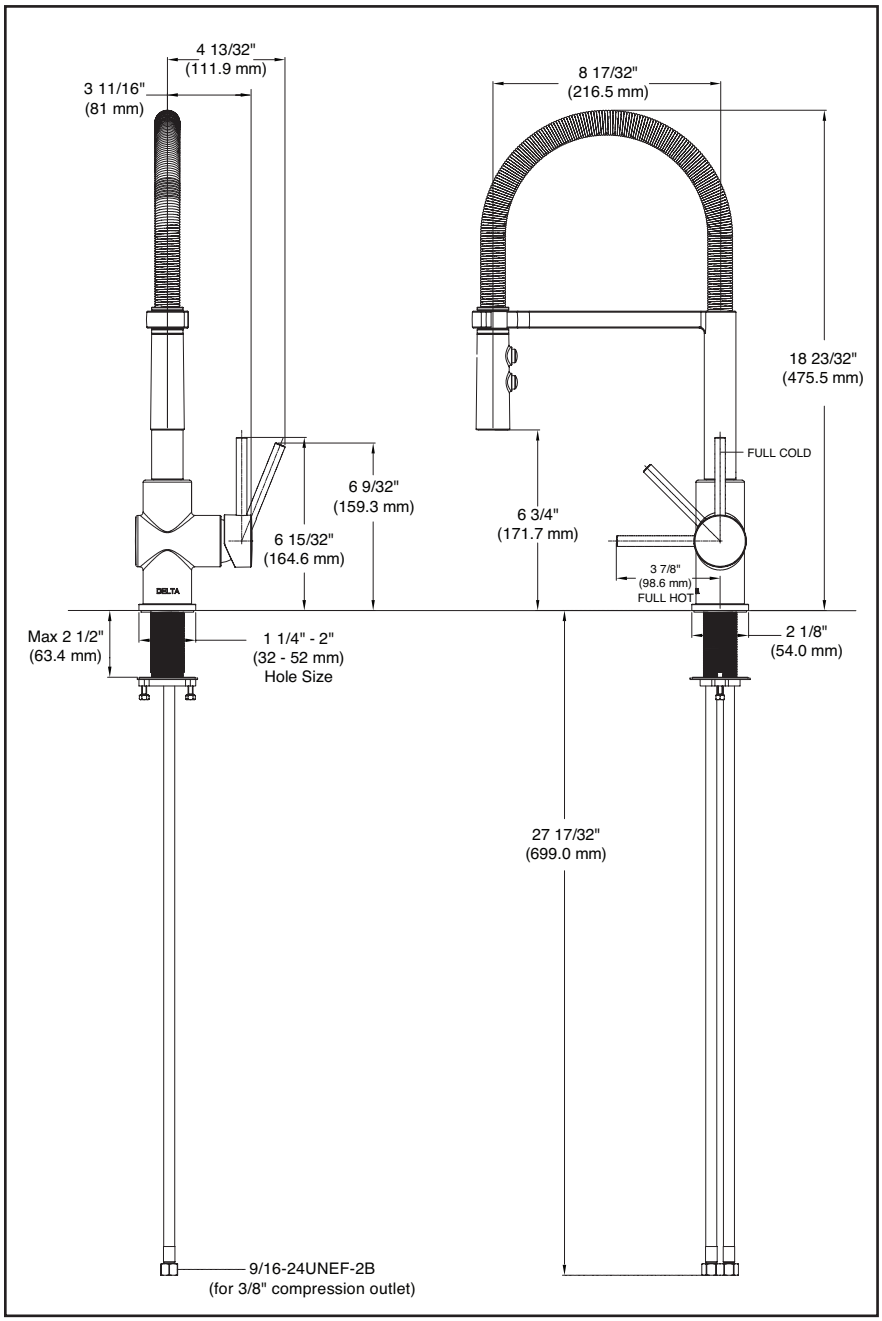

▲ **Designate proper finish suffix**

Delta reserves the right (1) to make changes in specifications and materials, and (2) to change or discontinue models, both without notice or obligation. Dimensions are for reference only. See current full-line price book or www.specselect.com for finish options and product availability.

DSP-K-987LF Rev. A

KITCHEN FAUCETS

- Tommy™ Gourmet Kitchen Faucet
- Single Handle Deck Mount
- 1 or 3 Hole Sink Applications

STANDARD SPECIFICATIONS:

- Solid brass fabricated body.
- Single handle kitchen faucet for exposed mounting on 1 or 3 hole sinks.
- Optional escutcheon – 8" centers, 10" long (RP63209).
- 18 23/32" (476mm) high, 8 17/32" (217mm) long spout nestled in a metal hub, swings 360°.
- Pull-down spout operates in an aerated or spray mode via an easy push button.
- Ceramic cartridge.
- 9/16"-24UNEF-2B threaded female adapter nuts for 3/8" compression fitting outlet.
- Integral double check valves in spray head.
- Maximum flow rate 1.8 gpm @ 60 PSI.

WARRANTY

- Lifetime Faucet and Finish Limited Warranty to the original consumer purchaser to be free from defects in material and workmanship.
- 5 Year Limited Warranty for usage in all industrial, commercial and business applications.

C US

COMPLIES WITH:

- Complies to ASME A112.18.1 / CSA B125.1
- Indicates compliance to ICC/ANSI A117.1
- Verified compliant with 0.25% weighted average Pb content regulations.

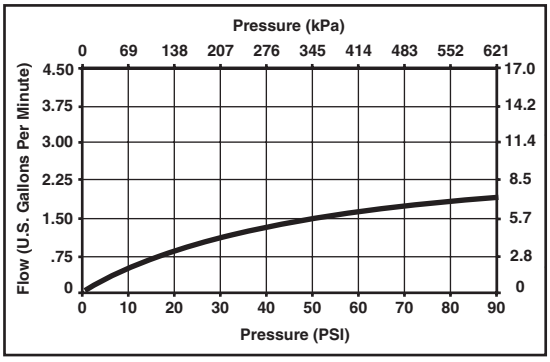

DELTA FAUCET COMPANY

55 E. 111th Street, Indianapolis, Indiana 46280
350 South Edgeware Road, St. Thomas, ON N5P 4L1
© 2014 Masco Corporation of Indiana