MOEN®

Specifications

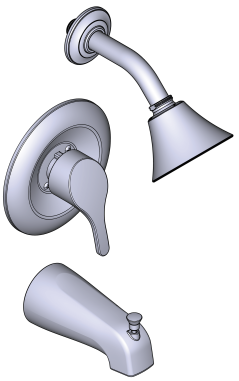

KLIO™ POSI-TEMP®
Single-Handle Tub/Shower Trim Kit

Models: T62481 (Bulk Packed 12 per carton)
T62482 (Bulk Packed 12 per carton)
T62483 (Bulk Packed 12 per carton)

Valves: 62300 series
2500 series

DESCRIPTION
- Metal construction with various finishes identified by suffix
- Includes showerhead, arm, flange and diverter tub spout
- Pressure balancing cycle valve design with an adjustable temperature limit stop

OPERATION
- Handle operates counterclockwise through a 270° arc with off at 6 o'clock and maximum hot at the 9 o'clock position. Shut off in clockwise direction
- Adjustable temperature limit stop to control maximum hot water temperature
- Pressure balancing mechanism maintains selected discharge temperature to ± 3° F

FLOW
- EP suffix models are limited to 1.75 gpm (6.6 L/min) at 80 psi

CARTRIDGE
- 1222 cartridge design
- Nonmetallic/nonferrous and stainless steel materials
- Accommodates back to back installations

STANDARDS
- Third party certified to meet ASME A112.18.1/CSA B125.1 and all applicable requirements referenced therein
- EP suffix models are third party certified to WaterSense®
- ADA for lever handle

WARRANTY
- Lifetime limited warranty against leaks, drips and finish defects to the original homeowner
- 10 year limited warranty when used in a multifamily installation
- 5 year limited warranty when used in a commercial installation

Visit www.moen.com/support for complete details and limitations

WaterSense Meets EPA Criteria
Certified by IAPMO R&T
EP Suffix

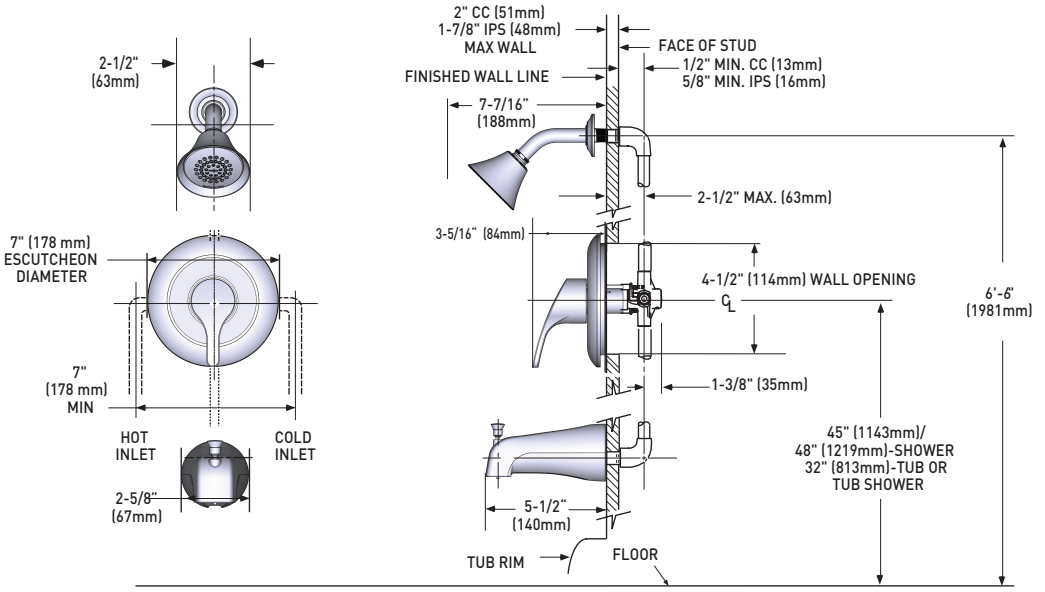

THICK WALL APPLICATION

Models Only

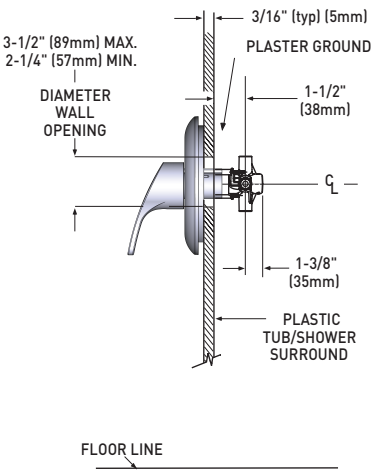

THIN WALL APPLICATION

CRITICAL DIMENSIONS DO NOT SCALE

©2022 Moen Incorporated

400-630-8866
www.moen.cn

01/24/2022 SPC2295 300000000000