Margaux®
Double Towel Bar
K-16253

Features
- Coordinates with other products in the Margaux collection

Material
- Premium metal construction for durability and reliability
- KOHLER® finishes resist corrosion and tarnishing

Installation
- Installation hardware and template included

Recommended Products/Accessories
K-23723 Faucet cleaner

Codes/Standards
None Applicable

KOHLER® Faucet Lifetime Limited Warranty
See website for detailed warranty information.

Available Colors/Finishes
Color tiles intended for reference only.

Color	Code	Description
	CP	Polished Chrome
	SN	Vibrant® Polished Nickel
	AF	Vibrant® French Gold
	BN	Vibrant® Brushed Nickel
	BV	Vibrant® Brushed Bronze

Margaux®

Double Towel Bar

K-16253

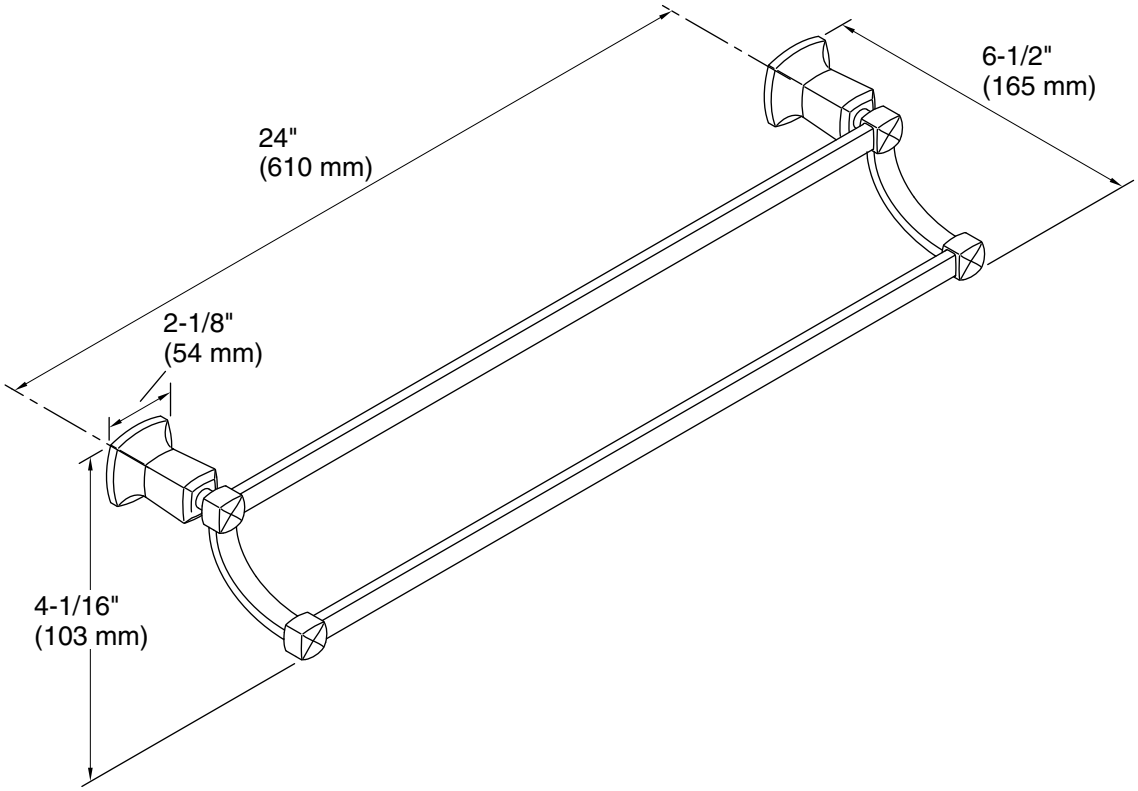

Technical Information

All product dimensions are nominal.

Material: Metal

Notes

CAUTION: Risk of personal injury. Do not install these products in any area where they are likely to be used inadvertently as a grab bar or support bar. These products are not designed or intended for use as a grab bar or support bar.

Install this product according to the installation guide.