Kalia

ONCE UPON A TIME...WATER®

104266

3-way AQUATONIK™ type T/P 1/2” valve with diverter

SPÉCIFICATIONS

Features

- 2 male water inlets 1/2NPT threaded or welded
- 3 male water outlets 1/2NPT threaded or welded
- Solid brass construction
- Total adjustment of 32 mm (1 1/4”)
- Can be installed back to back
- Support included for better stability during installation
- Operates 1 or 2 components at a time

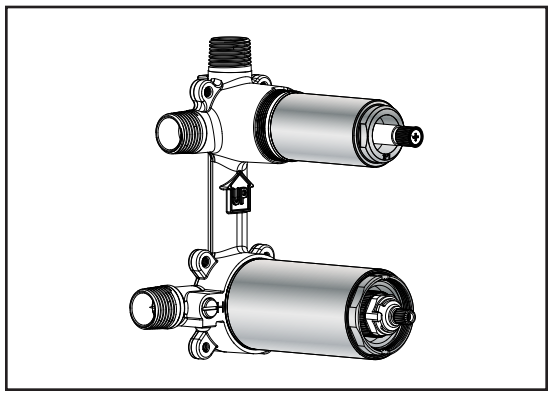

Colors (Finishes)

- Chrome: 104266-**110**
- Pure Nickel: 104266-**125**
- Matte Black: 104266-**160**

Maximum flow rate

- 1 outlet: 22 L/min (5.9 gpm) at 60 psi
- 2 outlets: 23.5 L/min (6.21 gpm) at 60 psi

Certifications

The specified model meets or exceeds the following standards;

Intertek

CSA B125.1
ASME A112.18.1
ICC A117.1

Installation Notes

This product must be installed following the installation instructions provided.

WARRANTY

Kalia Inc. guarantees all aspects of its products to be free of defects in material and workmanship for normal residential use. **Refer to the warranty included with the Kalia products for details**.

Product dimensions:

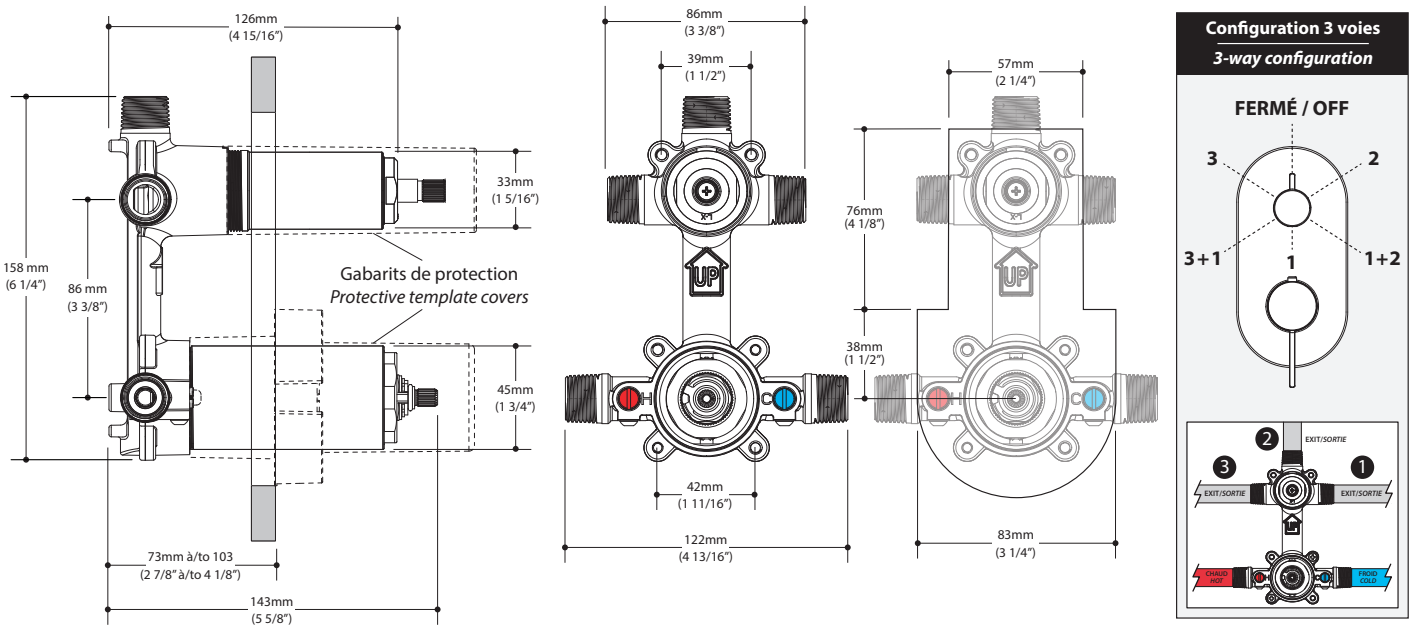

Important: Dimensions are approximated and are subject to changes. Please refer to the installation instructions.

Kalia
ONCE UPON A TIME...WATER®

1355, 2nd Street, Industrial Park
Sainte-Marie (Québec)
Canada G6E 1G9

T 418-387-9090
1-877-GO-KALIA (1-87- 465-2542)
F 418 387-9089

KaliaStyle.com