Rough, AXOR ShowerCollection Tub Spout
Finishes : **n.a.** Part no. : **10941181**

Description

Features

- Quick connection for easy, leak-free installation

Item details

List Price	$ 239.00

Compliance

Product image

Scale drawing

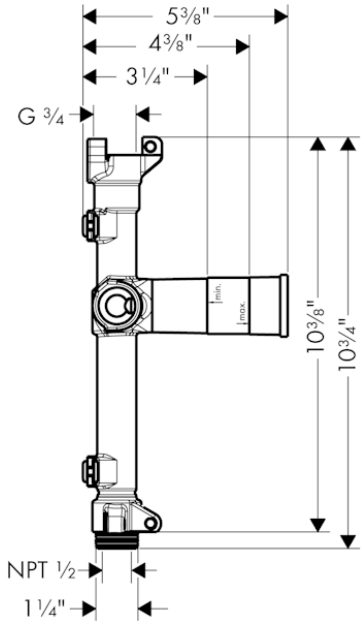

Rough, AXOR ShowerCollection Tub Spout
Finishes : **n.a.** Part no. : **10941181**

Exploded drawing

Year of production: **>12/11**

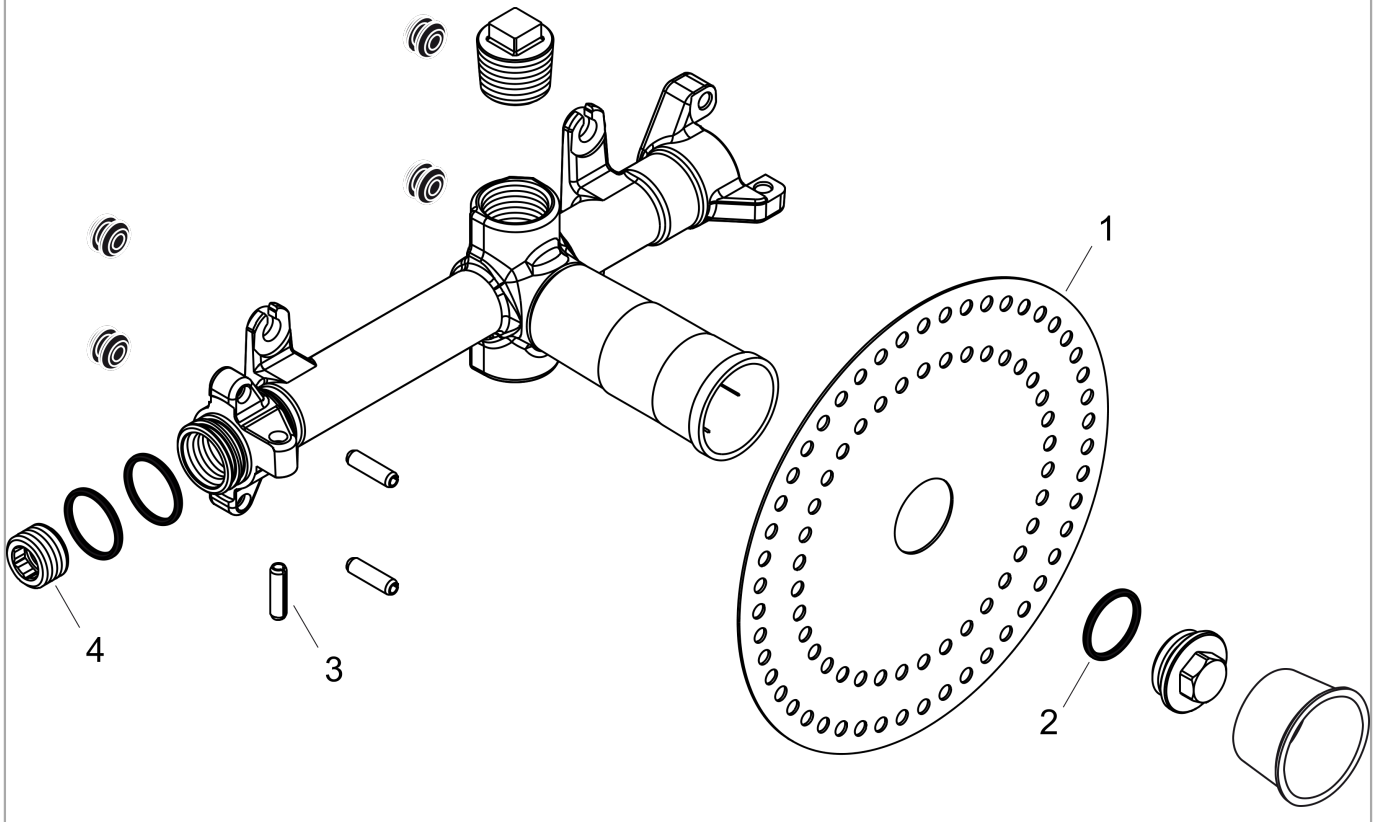

Rough, AXOR ShowerCollection Tub Spout
Finishes : **n.a.** Part no. : **10941181**

Spare parts list

Year of production: **>12/11**

Pos.	Description	Part no.	Price	PU
1	sealing foil	96492000	-	1
2	O-Ring 23x2,5	98183000	-	1
3	pin	95334000	-	1
4	plug	97998000	-	1